Innovens Pro

EN

MCA 45 - 65 - 90 - 115



User Guide

300024828-001-A

De Dietrich

Contents

1 Introduction 4

1.1 Used symbols 4

1.2 Abbreviations 4

1.3 General 5

1.3.1 Manufacturer's liability 5
1.3.2 Installer's liability 5
1.3.3 User's liability 5

1.4 Certifications 6

2 Safety instructions and recommendations 7

2.1 Safety instructions 7

2.2 Recommendations 8

3 Description 9

3.1 Operating principle 9

3.1.1 Gas/air setting 9
3.1.2 Combustion 9

3.2 Main parts 10

3.3 Control panel DIEMATIC iSystem 10

3.3.1 Description of the keys 10
3.3.2 Description of the display 11
3.3.3 Browsing in the menus 13

3.4 Control panel IniControl 14

3.4.1 Description of the keys 14
3.4.2 Description of the display 15

4 Operating the appliance - DIEMATIC iSystem 17

4.1 Putting the appliance into operation 17

4.2 Reading out measured values 17

4.3 Changing the settings 19

4.3.1 Setting the set point temperatures 19
4.3.2 Selecting the operating mode 20
4.3.3 Forcing domestic hot water production 21
4.3.4 Setting the contrast and lighting on the display 21
4.3.5 Setting the time and date 22
4.3.6 Selecting a timer programme 22
4.3.7 Customising a timer programme 23

4.3.8 Setting an annual clock 25

4.4 Installation shutdown 27

4.5 Frost protection 28

5 Operating the appliance - IniControl 29

5.1 Putting the appliance into operation 29

5.2 Reading out measured values 29

5.3 Changing the settings 30

5.3.1 Description of the parameters 30
5.3.2 Modification of the user-level parameters 31
5.3.3 Setting the manual mode 32
5.3.4 Changing the heating temperature 32
5.3.5 Modifying the domestic hot water temperature setting 32

5.4 Installation shutdown 33

5.5 Frost protection 33

6 Checking and maintenance 34

6.1 General instructions 34

6.1.1 Control panel DIEMATIC iSystem 34

6.2 Periodic checks 34

6.3 Filling the system 35

6.4 Bleeding the heating system 38

6.5 Draining the installation 40

7 Troubleshooting 41

7.1 Anti-hunting 41

7.2 Messages (Code type Bxx or Mxx) 41

7.3 Faults (Code type Lxx or Dxx) 43

7.3.1 Control panel DIEMATIC iSystem 44
7.3.2 Control panel IniControl 44
7.3.3 List of errors 44

8 Technical characteristics 50
8.1 Technical characteristics 50
9 Energy savings 51
9.1 Energy-saving advice 51
9.2 Recommendations 51
10 Warranty 52
10.1 General 52
10.2 Warranty terms 52

1 Introduction

1.1 Used symbols

In these instructions, various danger levels are employed to draw the user's attention to particular information. In so doing, we wish to safeguard the user's safety, obviate hazards and guarantee correct operation of the appliance.

DANGER

Risk of a dangerous situation causing serious physical injury.

WARNING

Risk of a dangerous situation causing slight physical injury.

CAUTION

Risk of material damage.

Signals important information.

Signals a referral to other instructions or other pages in the instructions.

1.2 Abbreviations

- **3CE**: Collective conduit for sealed boiler
- **DHW**: Domestic hot water
- **Interscenario switch**: Home automation switch that can be used to centralise and control several scenarios
- **Hi**: Lower heating value LHV
- **Hs**: Higher heating value HHV
- **IOBL**: Carrier current home automation bus
- **PPS**: Polypropylene hardly inflammable
- **PCU**: Primary Control Unit - PCB for managing burner operation
- **PSU**: Parameter Storage Unit - Parameter storage for PCBs PCU and SU
- **SCU**: Secondary Control Unit - **Diematic iSystem** control panel PCB
- **SU**: Safety Unit - Safety PCB
- **3WV**: 3-way valve

1.3 General

1.3.1. Manufacturer's liability

Our products are manufactured in compliance with the requirements of the various european applicable Directives. They are therefore delivered with CE marking and all relevant documentation.

In the interest of customers, we are continuously endeavouring to make improvements in product quality. All the specifications stated in this document are therefore subject to change without notice.

Our liability as the manufacturer may not be invoked in the following cases:

- Failure to abide by the instructions on using the appliance.
- Faulty or insufficient maintenance of the appliance.
- Failure to abide by the instructions on installing the appliance.

1.3.2. Installer's liability

The installer is responsible for the installation and inital start up of the appliance. The installer must respect the following instructions:

- Read and follow the instructions given in the manuals provided with the appliance.
- Carry out installation in compliance with the prevailing legislation and standards.
- Perform the initial start up and carry out any checks necessary.
- Explain the installation to the user.
- If a maintenance is necessary, warn the user of the obligation to check the appliance and maintain it in good working order.
- Give all the instruction manuals to the user.

1.3.3. User's liability

To guarantee optimum operation of the appliance, the user must respect the following instructions:

- Read and abide by the instructions given in the user manual.
- Call on qualified professionals to carry out installation and initial start up.
- Get your fitter to explain your installation to you.
- Have the required checks and services done.
- Keep the instruction manuals in good condition close to the appliance.

This appliance is not intended to be used by persons (including children) whose physcial, sensory or mental capacity is impaired or persons with no experience or knowledge, unless they have the benefit, through the intermediary of a person responsible for their safety, of supervision or prior instructions regarding use of the appliance. Care should be taken to ensure that children do not play with the appliance.

1.4 Certifications

CE identification no	**PIN 0063CL3333**
NOx classification	**5 (EN 297 pr A3, EN 656)**
Type of connection	Chimney: B_{23}, B_{33}
	Flue gas outlet: C_{13}, C_{33}, C_{43}, C_{53}, C_{63}, C_{83}, C_{93}

2 Safety instructions and recommendations

2.1 Safety instructions

DANGER

If you smell gas:

1. Do not use a naked flame, do not smoke, do not operate electrical contacts or switches (doorbell, light, motor, lift, etc..).
2. Isolate the gas supply.
3. Open the windows.
4. Evacuate the premises.
5. Call your fitter.

DANGER

If you smell flue gases:

1. Switch the appliance off.
2. Open the windows.
3. Evacuate the premises.
4. Call your fitter.

WARNING

Depending on the settings of the appliance:

- The temperature of the flue gas conduits may exceed 60°C.
- The temperature of the radiators may reach 85°C.
- The temperature of the domestic hot water may reach 65°C.

CAUTION

Do not neglect to service the appliance:

- For completely safe and optimum operation, you must have your boiler regularly serviced by an approved installer.

2.2 Recommendations

WARNING

Only qualified professionals are authorised to work on the appliance and the instalation.

- Regularly check the water pressure in the installation (minimum pressure 0,8 bar, recommended pressure between 1,5 and 2 bar).
- Keep the appliance accessible at all times.
- Never remove or cover labels and rating plates affixed to the appliance. Labels and rating plates must be legible throughout the entire lifetime of the appliance.
- The appliance should be on Summer or Antrifreeze mode rather than switched off to guarantee the following functions:
  - Anti blocking of pumps
  - Frost protection

3 Description

3.1 Operating principle

3.1.1. Gas/air setting

The casing fitted to the boiler is also used as an air box. Air is sucked in by the fan and gas injected into the venturi by the fan intake. The fan rotation speed is set according to the settings parameters, the thermal energy requirement and the temperatures measured by the temperature sensors. The gas and air are mixed in the venturi. The gas/air ratio ensures that the quantities of gas and air are adjusted to each other. This provides optimum combustion on the entire output range. The gas/air mixture is fed into the burner on top of the exchanger.

3.1.2. Combustion

The burner heats the heating water circulating in the heat exchanger. At a return temperature lower than around 55°C, the flue gases cool down to a temperature lower than the dew point, thus causing the condensation of the water vapour contained in the flue gases in the back side of the heat exchanger. The heat released during this condensation process (the latent heat or condensing heat) is also transferred to the heating water. The cooled combustion gases are evacuated via the combustion gas outlet flue. The condensation water is evacuated via a siphon.

3.2 Main parts

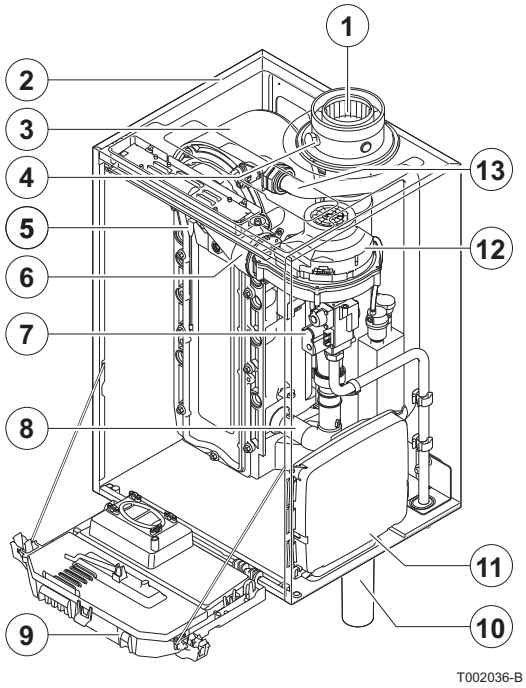

1	Flue gas outlet / Air intake
2	Casing/air box
3	Heat exchanger (Central heating)
4	Outlet for measuring combustion gases
5	Ignition/ionization electrode
6	Mixer pipe
7	Combined venturi and gas valve unit
8	Áir intake silencer
9	Instrument box
10	Siphon
11	Box for the control PCBs
12	Fan
13	Water flow pipe

3.3 Control panel DIEMATIC iSystem

3.3.1. Description of the keys

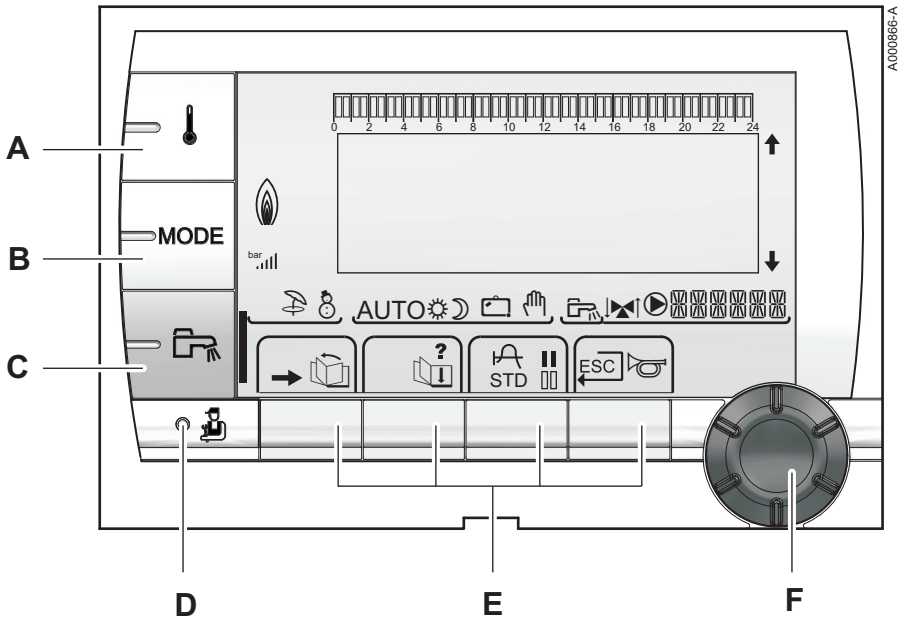

A	Temperature setting key (heating, DHW, swimming pool)
B	Operating mode selection key
C	DHW override key
D	Key to access the parameters reserved for the installer

E Keys on which the function varies as and when selections are made

F Rotary setting button:

- Turn the rotary button to scroll through the menus or modify a value
- Press the rotary button to access the menu selected or confirm a value modification

3.3.2. Description of the display

Key functions

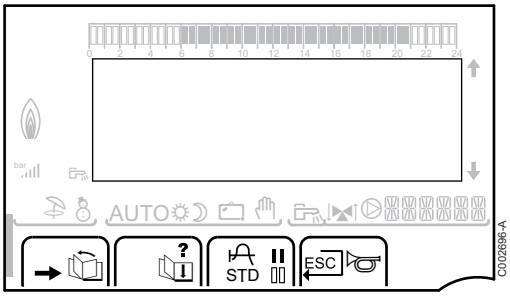

→	Access to the various menus
	Used to scroll through the menus
	Used to scroll through the parameters
?	The symbol is displayed when help is available
	Used to display the curve of the parameter selected
STD	Reset of the time programmes
II	Selection of comfort mode or selection of the days to be programmed
III	Selection of reduced mode or deselection of the days to be programmed
	Back to the previous level
ESC	Back to the previous level without saving the modifications made
	Manual reset

Flame output level

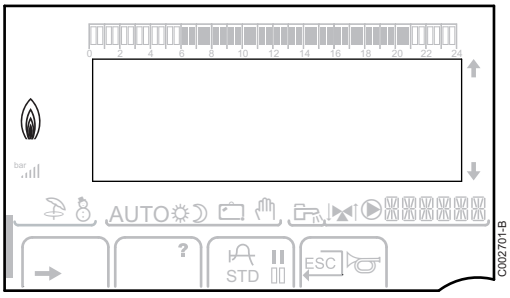



The whole symbol flashes: The burner starts up but the flame is not yet present



Part of the symbol flashes: Output is increasing



Steady symbol: The required output has been reached



Part of the symbol flashes: Output is dropping

Operating modes

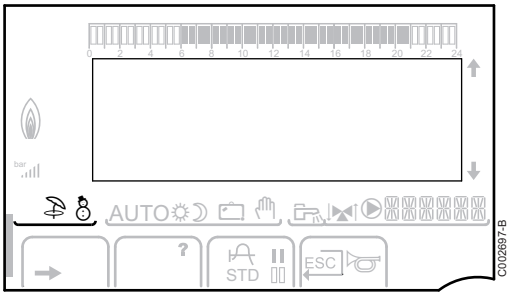

Summer mode: The heating is off. Domestic hot water continues to be produced

WINTER mode: Heating and domestic hot water working

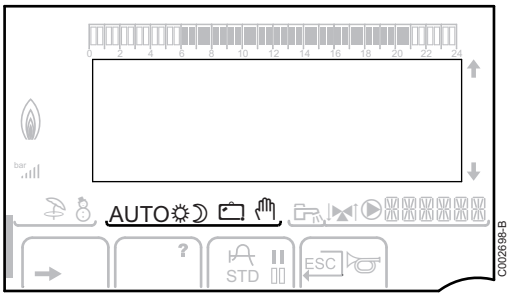

AUTO Operation in automatic mode according to the timer programme

Comfort mode: The symbol is displayed when a DAY override (comfort) is activated

- Flashing symbol: Temporary override
- Steady symbol: Permanent override

Reduced mode: The symbol is displayed when a NIGHT override (reduced) is activated

- Flashing symbol: Temporary override
- Steady symbol: Permanent override

Holiday mode: The symbol is displayed when a HOLIDAY override (antifreeze) is activated

- Flashing symbol: Holiday mode programmed
- Steady symbol: Holiday mode active

Manual mode

System pressure

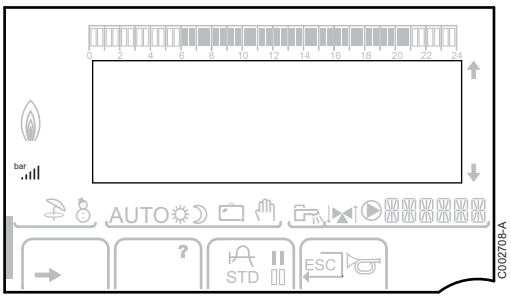

bar Pressure indicator: The symbol is displayed when a water pressure sensor is connected

- Flashing symbol: The quantity of water is insufficient
- Steady symbol: The quantity of water is sufficient

Water pressure level

- : 0,9 to 1,1 bar
- : 1,2 to 1,5 bar
- : 1,6 to 1,9 bar
- : 2,0 to 2,3 bar
- : > 2,4 bar

Domestic Hot Water override

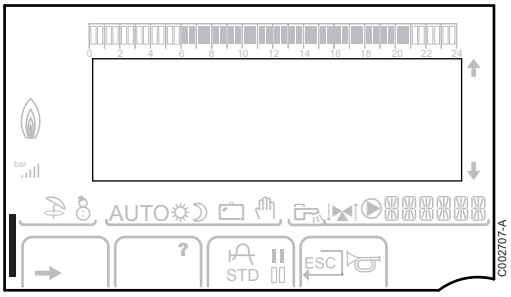

A bar is displayed when a DHW override is activated:

- Flashing bar: Temporary override
- Steady bar: Permanent override

Other information

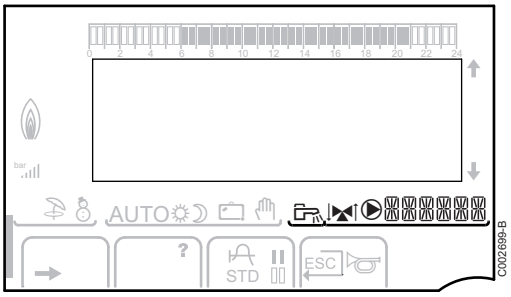

The symbol is displayed when domestic hot water production is running

Valve indicator: The symbol is displayed when a 3-way valve is connected

- : 3-way valve open
- : 3-way valve closed

The symbol is displayed when the pump is operating

Name of the circuit for which the parameters are displayed

3.3.3. Browsing in the menus

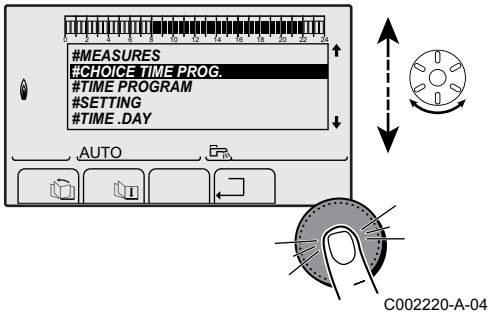

1. To select the desired menu, turn the rotary button.
2. To access the menu, press the rotary button.
   To go back to the previous display, press the key ⮌.

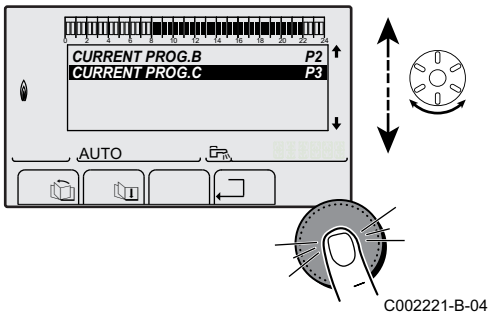

3. To select the desired parameter, turn the rotary button.
4. To modify the parameter, press the rotary button.
   To go back to the previous display, press the key ⮌.

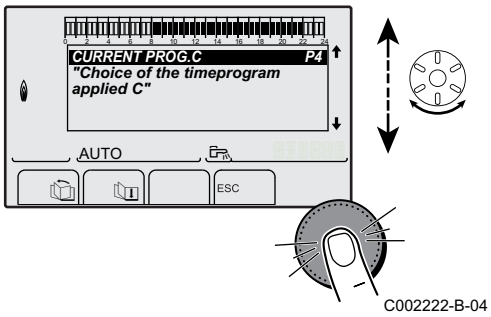

C002222-B-04

5. To modify the parameter, turn the rotary button.
6. To confirm, press the rotary button.

To cancel, press key ESC.

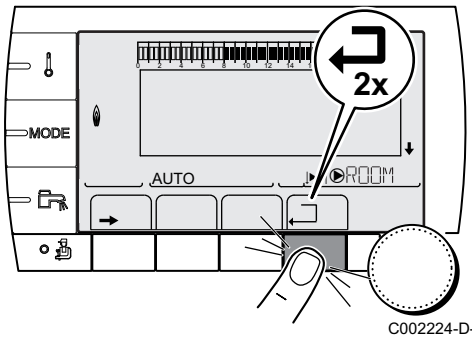

C002224-D-04

7. To go back to the main display, press key ⮐ 2 times.

It is possible to use the and keys instead of the rotary button.

3.4 Control panel IniControl

3.4.1. Description of the keys

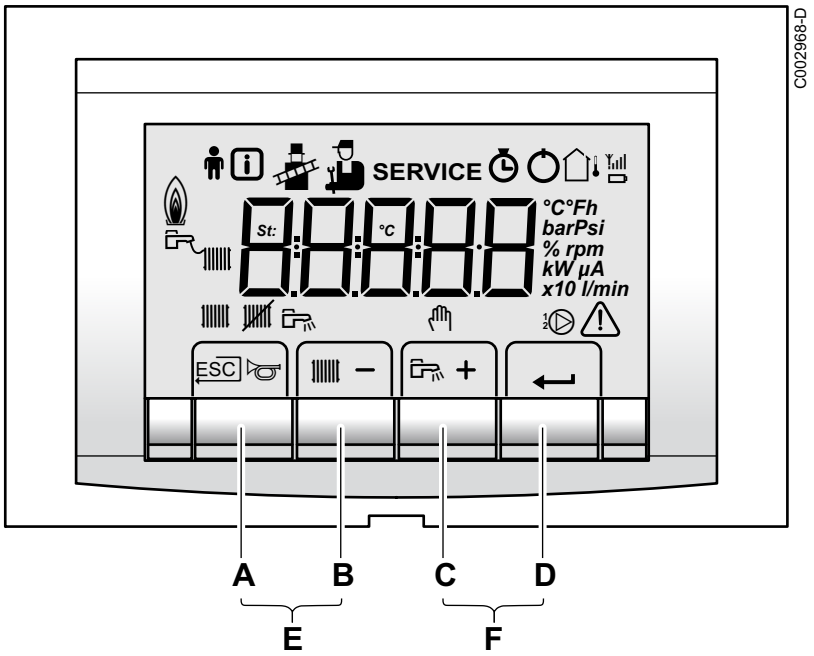

C002968-D

A	Return button ⮐, Escape ESC or Manual reset
B	Heating temperature button or **[-]**
C	DHW temperature button or **[+]**
D	⮐ [Enter] Key
E	[Chimney-sweeping] keys Press keys **A** and **B** simultaneously

F	[Menu] keys Press keys **C** and **D** simultaneously

3.4.2. Description of the display

■ Key functions

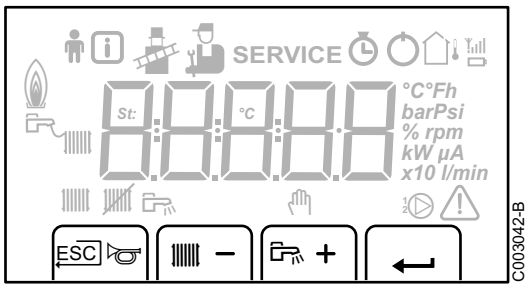

ESC	Back to the previous level without saving the modifications made
	Manual reset
	Central heating function: Access to the max. heating temperature parameter.
[-]	To reduce a value
	Sanitary hot water function: Access to sanitary hot water temperature parameter.
[+]	To increase a value
↵	Access the menu selected or confirm a value modification

■ Operating modes

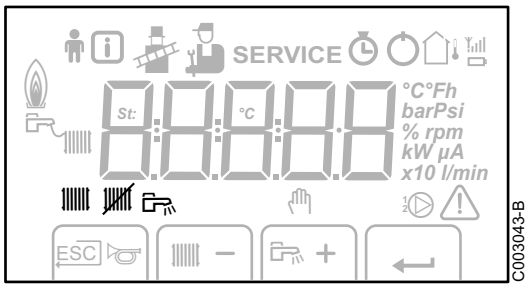

	State heating pump A
	Heating programme deactivated: The heating function is deactivated
	State DHW pump

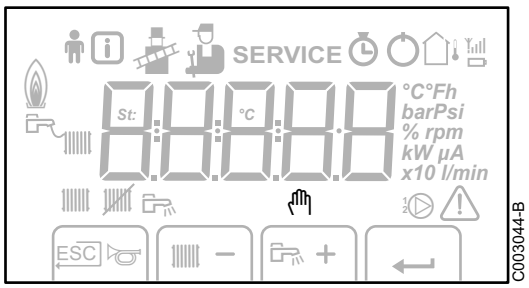

	Manual mode

Flame output level

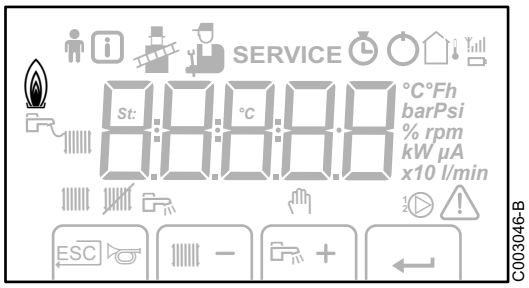

- Low output level 0 - 25 %
- Average output level 25 - 50 %
- High output level 50 - 75 %
- Output level 75 - 100 %

System pressure

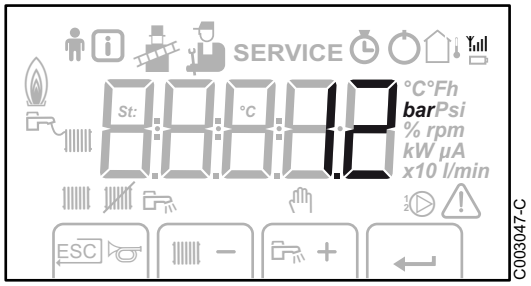

bar Pressure indicator:
The symbol is displayed next to the installation's pressure value. If no water pressure sensor is connected, -.- appears on the display

Other information

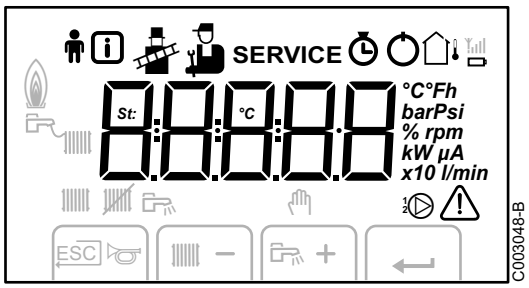

- User menu:
  Parameters at user level can be changed
- Information menu:
  Reading the various current values
- Chimney-sweeping position:
  Forced full or part load for CO_2 measurement
- Service menu:
  Parameters at installer level can be changed
- **SERVICE** Display with the symbols:
  + **SERVICE** + A (Maintenance message)
- Hour counter menu:
  Readout of the operating hours, number of successful starts and hours on mains supply
- On/Off switch:
  After 5 lock-outs, the device must be switched off/on again
- Outside temperature sensor present
- The symbol is displayed when the boiler pump is operating
- Fault:
  Boiler indicates a fault. This is signalled by a d. or L. code and a flashing display

4 Operating the appliance - DIEMATIC iSystem

4.1 Putting the appliance into operation

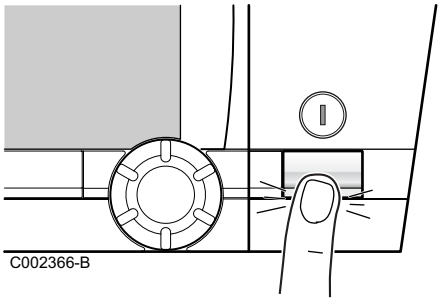
C002366-B

1. Check the water pressure in the installation shown on the control panel display.

If the water pressure is lower than 0,8 bar, more water should be added. If necessary, top up the water level in the heating system (recommended hydraulic pressure between 1,5 and 2,0 bar).
See chapter: "Filling the system", page 35

2. Open the gas valve on the boiler.
3. Turn on the boiler using the on/off switch.

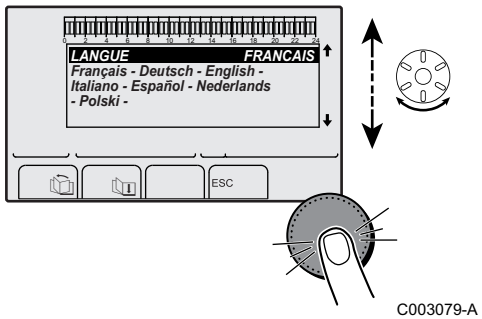

C003079-A

4. The first time the boiler is powered up, the **#LANGUAGE** menu is displayed. Select the desired language by turning the rotary button.
5. To confirm, press the rotary button.
The boiler will begin an automatic venting-programme (which lasts approx. 3 minutes) and will do this every time the power supply is isolated. If there is a problem, the error is displayed on the screen.

4.2 Reading out measured values

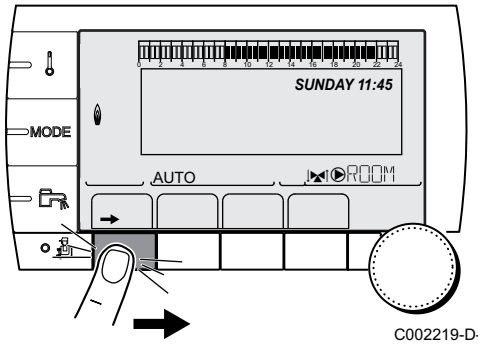

C002219-D-04

The various values measured by the appliance are displayed in the **#MEASURES** menu.

1. To access "user" level: Press the → key.
2. To select the **#MEASURES** menu.

- Turn the rotary button to scroll through the menus or modify a value.
- Press the rotary button to access the menu selected or confirm a value modification.

For a detailed explanation of menu browsing, refer to the chapter: "Browsing in the menus", page 13.

"User" level - #MEASURES menu		
Parameter	**Description**	**Unit**
OUTSIDE TEMP.	Outside temperature	°C
ROOMTEMP. A (1)	Room temperature of circuit A	°C
ROOMTEMP. B (1)	Room temperature of circuit B	°C
ROOMTEMP. C (1)	Room temperature of circuit C	°C
BOILER TEMP.	Water temperature in the boiler	°C
PRESSURE	Water pressure in the installation	bar
WATER TEMP. (1)	Water temperature in the DHW tank	°C
INST DWH TEMP. (1)	Instant hot water temperature	°C
STOR.TANK.TEMP (1)	Water temperature in the storage tank	°C
DCW TEMPERATURE	Domestic cold water temperature	°C
SWIMMING P.T.B (1)	Water temperature of the swimming pool on circuit B	°C
SWIMMING P.T.C (1)	Water temperature of the swimming pool on circuit C	°C
OUTLET TEMP. B (1)	Temperature of the flow water in circuit B	°C
OUTLET TEMP. C (1)	Temperature of the flow water in circuit C	°C
SYSTEM TEMP. (1)	Temperature of the system flow water if multi-generator	°C
T.DHW BOTTOM	Water temperature in the bottom of the DHW tank	°C
TEMP.TANK AUX (1)	Water temperature in the second DHW tank connected to the AUX circuit	°C
DHW A TEMP. (1)	Water temperature in the second DHW tank connected to circuit A	°C
BACK TEMP	Temperature of the boiler return water	°C
WIND SPEED	Fan rotation speed	rpm
POWER	Instantaneous boiler output (0%: Burner off or running at minimum output)	%
CURRENT (µA)	Ionization current	µA
NB IMPULS.	Number of burner start-ups (not restartable) The meter is incremented by 8 every 8 start-ups	
RUNTIME	Number of burner operation hours (not restartable) The meter is incremented by 2 every 2 hours	h
IN 0-10V (1)	Voltage at input 0-10 V	V
SEQUENCE	Control system sequence	
CTRL	Software control number	

(1) The parameter is only displayed for the options, circuits or sensors actually connected.

4.3 Changing the settings

4.3.1. Setting the set point temperatures

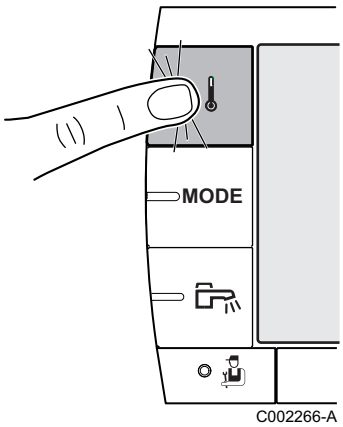

To set the various heating, DHW and swimming pool temperatures, proceed as follows:

1. Press the key.
2. To select the desired parameter, turn the rotary button.
3. To modify the parameter, press the rotary button.
   To go back to the previous display, press the key .
4. To modify the parameter, turn the rotary button.
5. To confirm, press the rotary button.

To cancel, press key ESC.

Menu			
Parameter	**Adjustment range**	**Description**	**Factory setting**
DAY TEMP. A	5 to 30 °C	Desired room temperature in comfort periods on circuit A	20 °C
NIGHT TEMP. A	5 to 30 °C	Desired room temperature in reduced periods on circuit A	16 °C
DAY TEMP. B (1)	5 to 30 °C	Desired room temperature in comfort periods on circuit B	20 °C
NIGHT TEMP. B (1)	5 to 30 °C	Desired room temperature in reduced periods on circuit B	16 °C
DAY TEMP. C (1)	5 to 30 °C	Desired room temperature in comfort periods on circuit C	20 °C
NIGHT TEMP. C (1)	5 to 30 °C	Desired room temperature in reduced periods on circuit C	16 °C
WATER TEMP. (1)	10 to 80 °C	Desired domestic hot water temperature in the DHW circuit	55 °C
TEMP.TANK AUX (1)	10 to 80 °C	Desired domestic hot water temperature in the auxiliary circuit	55 °C
DHW A TEMP. (1)	10 to 80 °C	Desired domestic hot water temperature in circuit A	55 °C
SWIMMING P.T.B (1)	5 to 39 °C	Desired temperature for swimming pool B	20 °C
SWIMMING P.T.C (1)	5 to 39 °C	Desired temperature for swimming pool C	20 °C

(1) The parameter is only displayed for the options, circuits or sensors actually connected.

4.3.2. Selecting the operating mode

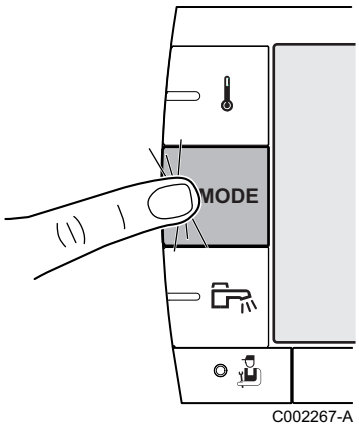

To select an operating mode, proceed as follows:

1. Press the **MODE** key.
2. To select the desired parameter, turn the rotary button.
3. To modify the parameter, press the rotary button.
   To go back to the previous display, press the key ⮌.
4. To modify the parameter, turn the rotary button.
5. To confirm, press the rotary button.

To cancel, press key ESC.

Menu MODE			
Parameter	**Adjustment range**	**Description**	**Factory setting**
AUTOMATIQUE		The comfort ranges are determined by the timer programme.	
DAY	7/7, xx:xx	Comfort mode is forced until the time indicated or all the time (7/7).	Present time + 1 hour
NIGHT	7/7, xx:xx	Reduced mode is forced until the time indicated or all the time (7/7).	Present time + 1 hour
HOLIDAYS	7/7, 1 to 365	The antifreeze mode is active on all boiler circuits. Number of days' holiday: xx heating OFF: xx:xx(1) Restarting: xx:xx(1)	Present date + 1 day
SUMMER		The heating is off. Domestic hot water continues to be produced.	
MANUEL		The generator operates according to the set point setting. All of the pumps operate. Option of setting the set point by simply turning the rotary button.	
FORCE AUTO	**ON/OFF**	An operating mode override is activated on the remote control (option). To force all circuits to run on **AUTOMATIC** mode, select **YES**.	
(1) The start and end days and the number of days are calculated in relation to each other.			

4.3.3. Forcing domestic hot water production

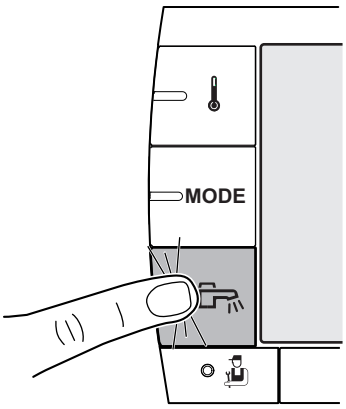

C002268-A

To force domestic hot water production, proceed as follows:

1. Press the key.
2. To select the desired parameter, turn the rotary button.
3. To modify the parameter, press the rotary button.
   To go back to the previous display, press the key .
4. To modify the parameter, turn the rotary button.
5. To confirm, press the rotary button.

To cancel, press key ESC.

Menu		
Parameter	**Description**	**Factory setting**
AUTOMATIQUE	The domestic hot water comfort ranges are determined by the timer programme.	
COMFORT	Domestic hot water comfort mode is forced until the time indicated or all the time (7/7).	Present time + 1 hour

4.3.4. Setting the contrast and lighting on the display

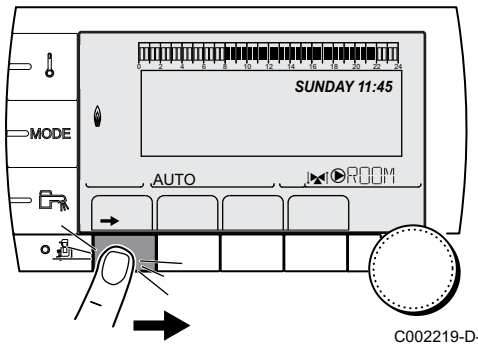

C002219-D-04

1. To access "user" level: Press the → key.
2. To select the **#SETTING** menu.

- Turn the rotary button to scroll through the menus or modify a value.
- Press the rotary button to access the menu selected or confirm a value modification.

For a detailed explanation of menu browsing, refer to the chapter: "Browsing in the menus", page 13.

3. To set the following parameters:

"User" level - #SETTING menu				
Parameter	**Adjustment range**	**Description**	**Factory setting**	**Customer setting**
CONTRAST DISP.		Adjusting the display contrast.		
BACK LIGHT	**COMFORT**	The screen is illuminated continuously in daytime periods.	**ECO**	
	ECO	The screen is illuminated for 2 minutes whenever pressed.		

4.3.5. Setting the time and date

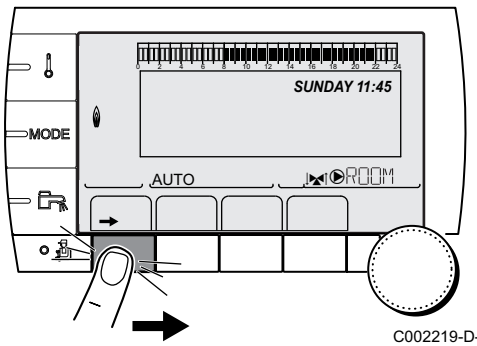

C002219-D-04

1. To access "user" level: Press the → key.
2. To select the **#TIME .DAY** menu.

- Turn the rotary button to scroll through the menus or modify a value.
- Press the rotary button to access the menu selected or confirm a value modification.

For a detailed explanation of menu browsing, refer to the chapter: "Browsing in the menus", page 13.

3. To set the following parameters:

"User" level - #TIME .DAY menu				
Parameter	**Adjustment range**	**Description**	**Factory setting**	**Customer setting**
HOURS	0 to 23	Hours setting		
MINUTE	0 to 59	Minutes setting		
DAY	Monday to Sunday	Setting the day of the week		
DATE	1 to 31	Day setting		
MONTH	January to December	Month setting		
YEAR	2008 to 2099	Year setting		
SUM. TIME:	**AUTO**	automatic switch to summer time on the last Sunday in March and back to winter time on the last Sunday in October.	**AUTO**	
	MANU	for countries where the time change is done on other dates or is not in use.		

4.3.6. Selecting a timer programme

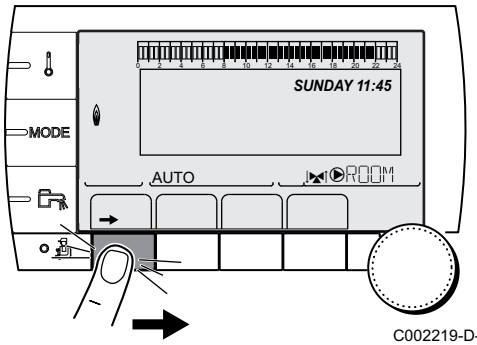

C002219-D-04

1. To access "user" level: Press the → key.
2. To select the **#CHOICE TIME PROG.** menu.

- Turn the rotary button to scroll through the menus or modify a value.
- Press the rotary button to access the menu selected or confirm a value modification.

For a detailed explanation of menu browsing, refer to the chapter: "Browsing in the menus", page 13.

3. To select the desired parameter.

"User" level - #CHOICE TIME PROG. menu		
Parameter	**Adjustment range**	**Description**
CURRENT PROG.A	P1 / P2 / P3 / P4	Comfort programme activated (Circuit A)
CURRENT PROG.B	P1 / P2 / P3 / P4	Comfort programme activated (Circuit B)
CURRENT PROG.C	P1 / P2 / P3 / P4	Comfort programme activated (Circuit C)

4. Assign the desired timer programme (P1 to P4) to the circuit with the rotary button.

4.3.7. Customising a timer programme

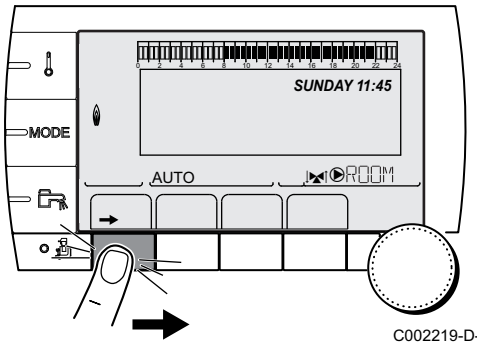

C002219-D-04

1. To access "user" level: Press the → key.
2. To select the **#TIME PROGRAM** menu.

- Turn the rotary button to scroll through the menus or modify a value.
- Press the rotary button to access the menu selected or confirm a value modification.

For a detailed explanation of menu browsing, refer to the chapter: "Browsing in the menus", page 13.

3. To select the desired parameter.

"User" level - #TIME PROGRAM menu		
Parameter	**Time schedule**	**Description**
TIME PROG.A	**PROG P2 A** **PROG P3 A** **PROG P4 A**	Timer programme for circuit A
TIME PROG.B	**PROG P2 B** **PROG P3 B** **PROG P4 B**	Timer programme for circuit B
TIME PROG.C	**PROG P2 C** **PROG P3 C** **PROG P4 C**	Timer programme for circuit C
TIME PROG.DHW		DHW circuit timer programme
TIME PROG.AUX		Auxiliary circuit timer programme

4. To select a timer programme to be modified.
5. **To select to days for which the timer programme is to be modified**:
   Turn the rotary button to the left until you reach the day desired.
   To confirm, press the rotary button.

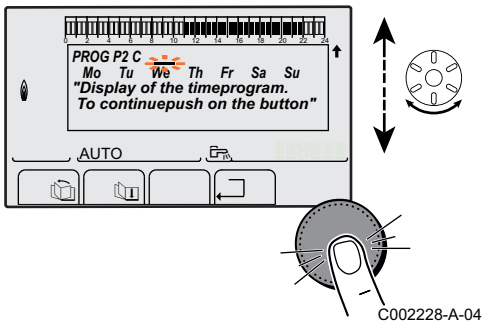

C002228-A-04

6. ▮▮ : **Day selection**
   Press key ▮▮ / ▯▯ until the symbol ▮▮ is displayed.
   Turn the rotary button to the right to select the day(s) desired.
   ▯▯ : **Cancelling the day selection**
   Press key ▮▮ / ▯▯ until the symbol ▯▯ is displayed.
   Turn the rotary button to the right to cancel selection of the relevant day(s).
7. When the days desired for the programme have been selected, press the rotary button to confirm.

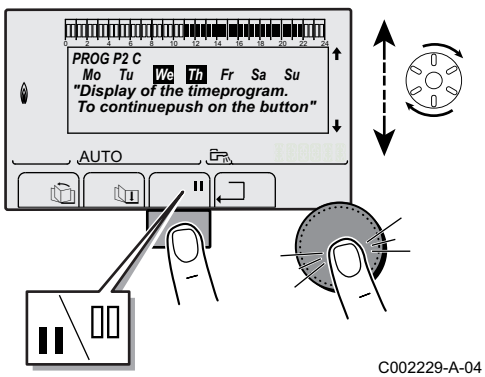

C002229-A-04

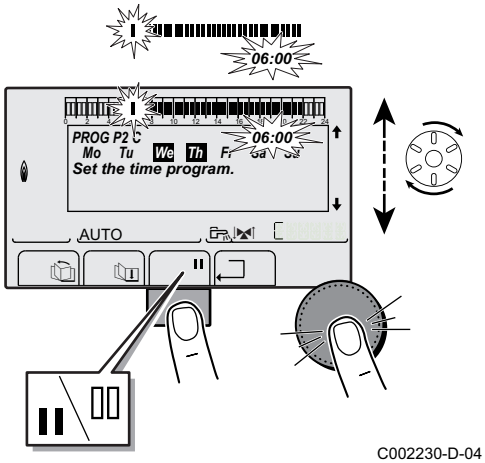

C002230-D-04

8. **To define the timer ranges for the comfort mode and reduced mode**:
   Turn the rotary button to the left until **0:00** is displayed. The first segment of the graphic bar for the timer programme flashes.
9. ▌▌ : **Comfort mode selection**
   Press key ▌▌ / ▯▯ until the symbol ▌▌ is displayed.
   To select a comfort time range, turn the rotary button to the right.
   ▯▯ : **Reduced mode selection**
   Press key ▌▌ / ▯▯ until the symbol ▯▯ is displayed.
   To select a reduced time range, turn the rotary button to the right.
10. When the times for the comfort mode have been selected, press the rotary button to confirm.

"User" level - #TIME PROGRAM menu					
	Day	Comfort periods / Filling enabled:			
		P1 _____	P2 _____	P3 _____	P4 _____
TIME PROG.A	Monday	6:00 to 22:00			
	Tuesday	6:00 to 22:00			
	Wednesday	6:00 to 22:00			
	Thursday	6:00 to 22:00			
	Friday	6:00 to 22:00			
	Saturday	6:00 to 22:00			
	Sunday	6:00 to 22:00			
TIME PROG.B	Monday	6:00 to 22:00			
	Tuesday	6:00 to 22:00			
	Wednesday	6:00 to 22:00			
	Thursday	6:00 to 22:00			
	Friday	6:00 to 22:00			
	Saturday	6:00 to 22:00			
	Sunday	6:00 to 22:00			
TIME PROG.C	Monday	6:00 to 22:00			
	Tuesday	6:00 to 22:00			
	Wednesday	6:00 to 22:00			
	Thursday	6:00 to 22:00			
	Friday	6:00 to 22:00			
	Saturday	6:00 to 22:00			
	Sunday	6:00 to 22:00			
TIME PROG.DHW	Monday				
	Tuesday				
	Wednesday				
	Thursday				
	Friday				
	Saturday				
	Sunday				

"User" level - #TIME PROGRAM menu					
	Day	Comfort periods / Filling enabled:			
		P1 _____	P2 _____	P3 _____	P4 _____
TIME PROG.AUX	Monday				
	Tuesday				
	Wednesday				
	Thursday				
	Friday				
	Saturday				
	Sunday				

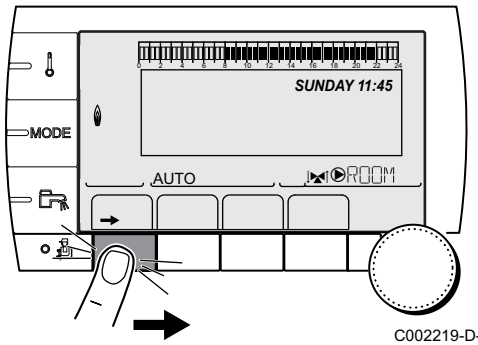

C002219-D-04

4.3.8. Setting an annual clock

The annual clock is used to programme up to 10 heating stop periods over one year. The circuits selected for this stop are in Antifreeze mode during the period chosen.

1. To access "user" level: Press the ➙ key.
2. Select the menu **#ANNUAL PROG**.

- Turn the rotary button to scroll through the menus or modify a value.
- Press the rotary button to access the menu selected or confirm a value modification.

For a detailed explanation of menu browsing, refer to the chapter: "Browsing in the menus", page 13.

3. To select the desired parameter.

OFF	No stop
A	circuit A
B	circuit B
AB	circuit A, B
C	circuit C
AC	circuit A, C
BC	circuit B, C
ABC	circuit A, B, C
SU	DHW circuit
A+E	circuit A and DHW
B+E	circuit B and DHW
AB+E	circuit A, B and DHW
C+E	circuit C and DHW
AC+W	circuit A, C and DHW
BC+W	circuit B, C and DHW
ALL	circuit A, B, C and DHW

4. Set the start date and the end date of the shutdown selected.
5. To deactivate a shutdown, select the shutdown and set to **OFF**.
6. To select another shutdown, press the button.

Annual programme (Factory setting)			
Stop no.	Circuit concerned	Start date	End date
1	**OFF**	01-01	01-01
2	**OFF**	01-01	01-01
3	**OFF**	01-01	01-01
4	**OFF**	01-01	01-01
5	**OFF**	01-01	01-01
6	**OFF**	01-01	01-01
7	**OFF**	01-01	01-01
8	**OFF**	01-01	01-01
9	**OFF**	01-01	01-01
10	**OFF**	01-01	01-01

For example: Customised programming			
Stop no.	Circuit concerned	Start date	End date
1	**AC**	01-11	10-11
2	**AC**	20-12	02-01

If setting **STOP**: **NO**, the stop is deactivated and the start and end dates are not displayed.

"User" level - #ANNUAL PROG menu				
		Description	**Factory setting**	**Adjustment range**
STOP N 1:		Selection of the circuit stopped	**OFF**	**OFF**, **A**, **B**, **AB**, **C**, **AC**, **BC**, **ABC**, **SU**, **A +E**, **B+E**, **AB+E**, **C+E**, **AC+W**, **BC+W**, **ALL**
	BEG.DATE N 01	Setting start date of the stop	01	1-31
	BEG.MONTH N 01	Setting start month of the stop	01	1-12
	END DATE N 01	Setting end date of the stop	01	1-31
	END MONTH N 01	Setting end month of the stop	01	1-12
STOP N 2:		Selection of the circuit stopped	**OFF**	**OFF**, **A**, **B**, **AB**, **C**, **AC**, **BC**, **ABC**, **SU**, **A +E**, **B+E**, **AB+E**, **C+E**, **AC+W**, **BC+W**, **ALL**
	BEG.DATE N 02	Setting start date of the stop	01	1-31
	BEG.MONTH N 02	Setting start month of the stop	01	1-12
	END DATE N 02	Setting end date of the stop	01	1-31
	END MONTH N 02	Setting end month of the stop	01	1-12
STOP N 3:		Selection of the circuit stopped	**OFF**	**OFF**, **A**, **B**, **AB**, **C**, **AC**, **BC**, **ABC**, **SU**, **A +E**, **B+E**, **AB+E**, **C+E**, **AC+W**, **BC+W**, **ALL**
	BEG.DATE N 03	Setting start date of the stop	01	1-31
	BEG.MONTH N 03	Setting start month of the stop	01	1-12
	END DATE N 03	Setting end date of the stop	01	1-31
	END MONTH N 03	Setting end month of the stop	01	1-12
STOP N 4:		Selection of the circuit stopped	**OFF**	**OFF**, **A**, **B**, **AB**, **C**, **AC**, **BC**, **ABC**, **SU**, **A +E**, **B+E**, **AB+E**, **C+E**, **AC+W**, **BC+W**, **ALL**
	BEG.DATE N 04	Setting start date of the stop	01	1-31
	BEG.MONTH N 04	Setting start month of the stop	01	1-12
	END DATE N 04	Setting end date of the stop	01	1-31
	END MONTH N 04	Setting end month of the stop	01	1-12

"User" level - #ANNUAL PROG menu				
		Description	**Factory setting**	**Adjustment range**
STOP N 5:		Selection of the circuit stopped	**OFF**	**OFF**, **A**, **B**, **AB**, **C**, **AC**, **BC**, **ABC**, **SU**, **A +E**, **B+E**, **AB+E**, **C+E**, **AC+W**, **BC+W**, **ALL**
	BEG.DATE N 05	Setting start date of the stop	01	1-31
	BEG.MONTH N 05	Setting start month of the stop	01	1-12
	END DATE N 05	Setting end date of the stop	01	1-31
	END MONTH N 05	Setting end month of the stop	01	1-12
STOP N 6:		Selection of the circuit stopped	**OFF**	**OFF**, **A**, **B**, **AB**, **C**, **AC**, **BC**, **ABC**, **SU**, **A +E**, **B+E**, **AB+E**, **C+E**, **AC+W**, **BC+W**, **ALL**
	BEG.DATE N 06	Setting start date of the stop	01	1-31
	BEG.MONTH N 06	Setting start month of the stop	01	1-12
	END DATE N 06	Setting end date of the stop	01	1-31
	END MONTH N 06	Setting end month of the stop	01	1-12
STOP N 7:		Selection of the circuit stopped	**OFF**	**OFF**, **A**, **B**, **AB**, **C**, **AC**, **BC**, **ABC**, **SU**, **A +E**, **B+E**, **AB+E**, **C+E**, **AC+W**, **BC+W**, **ALL**
	BEG.DATE N 07	Setting start date of the stop	01	1-31
	BEG.MONTH N 07	Setting start month of the stop	01	1-12
	END DATE N 07	Setting end date of the stop	01	1-31
	END MONTH N 07	Setting end month of the stop	01	1-12
STOP N 8:		Selection of the circuit stopped	**OFF**	**OFF**, **A**, **B**, **AB**, **C**, **AC**, **BC**, **ABC**, **SU**, **A +E**, **B+E**, **AB+E**, **C+E**, **AC+W**, **BC+W**, **ALL**
	BEG.DATE N 08	Setting start date of the stop	01	1-31
	BEG.MONTH N 08	Setting start month of the stop	01	1-12
	END DATE N 08	Setting end date of the stop	01	1-31
	END MONTH N 08	Setting end month of the stop	01	1-12
STOP N 9:		Selection of the circuit stopped	**OFF**	**OFF**, **A**, **B**, **AB**, **C**, **AC**, **BC**, **ABC**, **SU**, **A +E**, **B+E**, **AB+E**, **C+E**, **AC+W**, **BC+W**, **ALL**
	BEG.DATE N 09	Setting start date of the stop	01	1-31
	BEG.MONTH N 09	Setting start month of the stop	01	1-12
	END DATE N 09	Setting end date of the stop	01	1-31
	END MONTH N 09	Setting end month of the stop	01	1-12
STOP N 10:		Selection of the circuit stopped	**OFF**	**OFF**, **A**, **B**, **AB**, **C**, **AC**, **BC**, **ABC**, **SU**, **A +E**, **B+E**, **AB+E**, **C+E**, **AC+W**, **BC+W**, **ALL**
	BEG.DATE N 10	Setting start date of the stop	01	1-31
	BEG.MONTH N 10	Setting start month of the stop	01	1-12
	END DATE N 10	Setting end date of the stop	01	1-31
	END MONTH N 10	Setting end month of the stop	01	1-12

4.4 Installation shutdown

CAUTION

Do not switch off the boiler. If the central heating system is not used for a long period, we recommend activating the **HOLIDAYS** mode.

4.5 Frost protection

CAUTION

- The anitfreeze protection does not function if the boiler is switched off.
- The integrated protection system only protects the boiler, not the installation. To protect the installation, set the appliance to **HOLIDAYS** mode.

The **HOLIDAYS** mode protects:

- The installation if the outside temperature is lower than 3°C (factory setting).
- The room temperature if a remote control is connected and the room temperature is lower than 6 °C (factory setting).
- The domestic hot water tank if the tank temperature is lower than 4 °C (the water is reheated to 10 °C).

To configure the holidays mode: See chapter: "Selecting the operating mode", page 20.

5 Operating the appliance - IniControl

5.1 Putting the appliance into operation

1. Check the water pressure in the installation shown on the control panel display.

If the water pressure is lower than 0,8 bar, more water should be added. If necessary, top up the water level in the heating system (recommended hydraulic pressure between 1,5 and 2,0 bar).
See chapter: "Filling the system", page 35

2. Open the gas valve on the boiler.
3. Switch on the boiler.
4. The start-up cycle begins and cannot be interrupted. During the start-up cycle, the display shows the following information:
   F□:XX : Software version
   P□:XX : Parameter version
   The version numbers are displayed alternately.
5. A vent cycle of a duration of around 3 minutes is carried out automatically.
6. In addition to 0, in STAND-BY the display normally shows the water pressure and the symbols, and .

5.2 Reading out measured values

The following current values can be read off the information menu :

- St = State.
- Su = Sub-status.
- t1 = Flow temperature (°C).
- t2 = Return temperature (°C).
- t3 = Calorifier temperature (°C).
- t4 = Outside temperature (°C).
- t5 = Solar boiler temperature (°C).
- SP = Internal set point (°C).
- FL = Ionisation current (µA).
- nF = Fan speed in rpm.
- Pr = Water pressure (bar).
- Po = Supplied relative heat output (%).

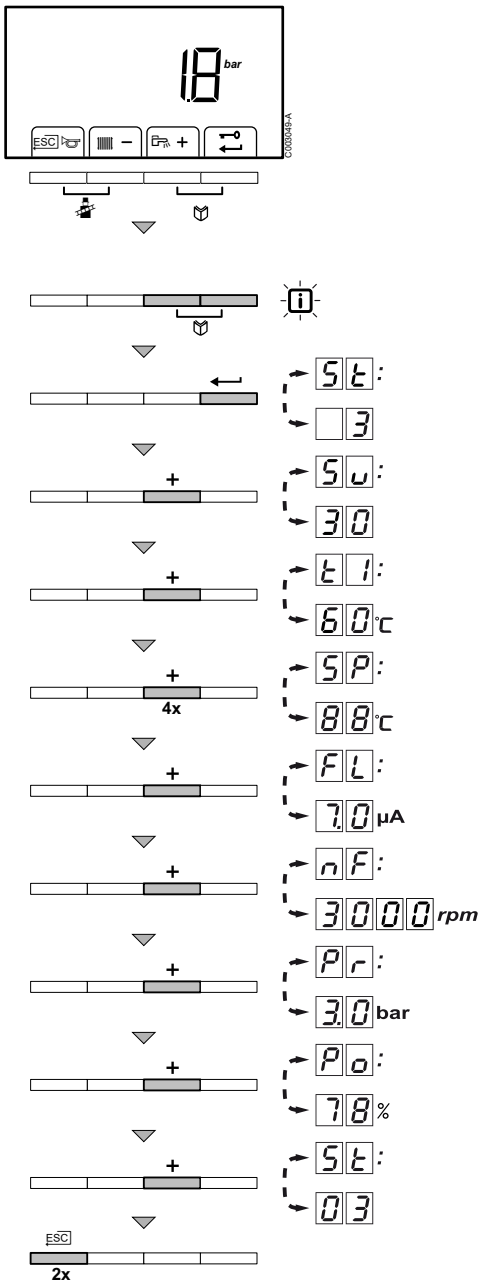

The current values can be read as follows:

1. Press the two keys simultaneously. The symbol flashes.
2. Confirm using key ⟵. St is displayed, alternating with the current status 3 (for example).
3. Press the **[+]** key. Su is displayed, alternating with the current sub-status 30 (for example).
4. Press the **[+]** key. t1 is displayed, alternating with the current flow temperature 60°C (for example).
5. Press the **[+]** key successively to scroll down the various parameters. t2, t3, t4, t5 .
6. Press the **[+]** key. SP is displayed, alternating with the internal set point 88°C (for example).
7. Press the **[+]** key. FL is displayed, alternating with the current ionisation current 7.0 µA (for example).
8. Press the **[+]** key. nF is displayed, alternating with the current fan rotation speed 3000 rpm (for example).
9. Press the **[+]** key. Pr is displayed, alternating with the current water pressure 3.0 bar (for example). If no water pressure sensor is connected, **[-.-]** appears on the display.
10. Press the **[+]** key. Po is displayed, alternating with the current modulation percentage 78 % (for example).
11. Press the **[+]** key. The readout cycle starts again with St.
12. Press 2 times on key ⮌ to return to the current operating mode.

5.3 Changing the settings

5.3.1. Description of the parameters

Parameter	Description	Adjustment range	Factory setting			
			MCA			
			45	65	90	115
P1	Maximum outlet temperature	20 to 90 °C	80	80	80	80
P2	Domestic hot water temperature: T_{SET}	40 to 65 °C	60	60	60	60
P3	Heating / DHW mode	Do not modify	1	1	1	1
P4	Mode ECO	Do not modify	2	2	2	2
P5	Anticipation resistance	Do not modify	0	0	0	0

Parameter	Description	Adjustment range	Factory setting			
			MCA			
			45	65	90	115
P6	Display screen	Do not modify	2	2	2	2
P7	Post-circulation of the boiler pump connected to the PCU	1 to 98 minutes 99 minutes = continuous	3	3	3	3
P8	Brightness of display lighting	Do not modify	1	1	1	1

5.3.2. Modification of the user-level parameters

Parameters P1 to P8 can be modified by the user in order to meet central heating and DHW comfort needs.

CAUTION

Modification of the factory settings may be detrimental to the functioning of the boiler.

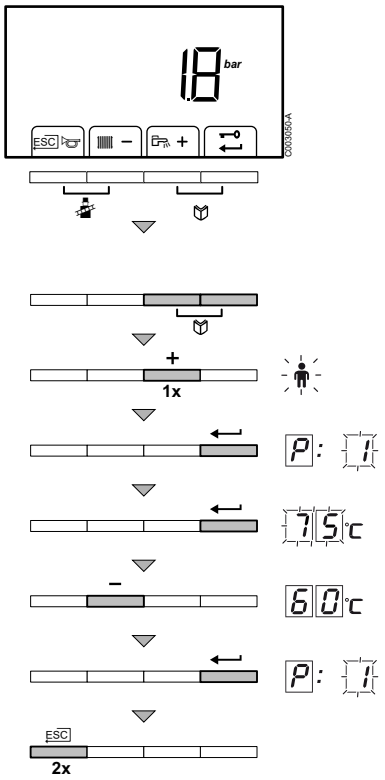

1. Press the two keys simultaneously and then key **[+]** until the symbol flashes on the menu bar.
2. Select the users menu using the key ↵. P: 1 is displayed with 1 flashing.
3. Press the ↵ key a second time. The value 80°C appears and flashes (for example).
4. Change the value by pressing the **[-]** or **[+]** key. In this example using key **[-]** to 60°C.
5. Confirm the value with the ↵ key. P: 1 is displayed with 1 flashing.
6. Press 2 times on key ⮌ to return to the current operating mode.

- The parameters P2 to P8 are changed in the same way as P1. After step 2, use the **[+]** key to move to the required parameter.
- The parameters P1 (the maximum heating water temperature) and P2 (the maximum drinking water temperature) can also be modified using the quick selection menu.

5.3.3. Setting the manual mode

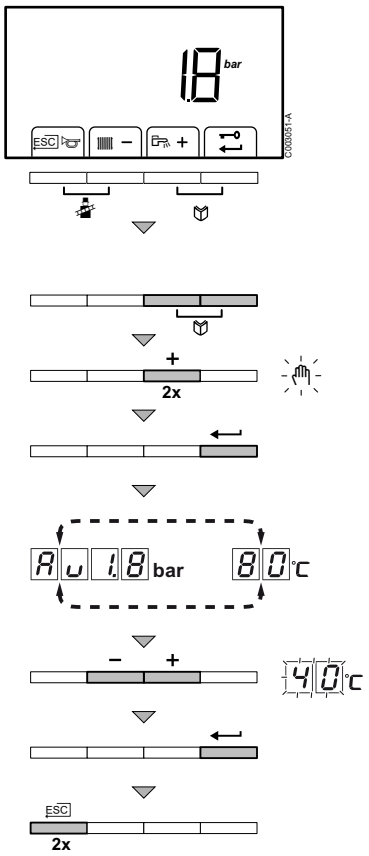

In some cases it may be necessary to switch the boiler to manual operation, For example, if the controller has not yet been connected. The boiler can be switched to automatic or manual operation under the symbol ✋. To do this, proceed as follows:

1. Press the two keys simultaneously and then key **[+]** until the symbol ✋ flashes on the menu bar.
2. Press the ↵ key:
   or
   The text AU with the current water pressure (only if an outside sensor is connected). The flow temperature is determined by the internal heating curve.
   or
   The value of the minimum flow temperature.
3. Press the **[-]** or **[+]** key to increase this value temporarily in manual operation.
4. Confirm the value with the ↵ key. The boiler is now set to manual operation.
5. Press 2 times on key ⮌ to return to the current operating mode.

5.3.4. Changing the heating temperature

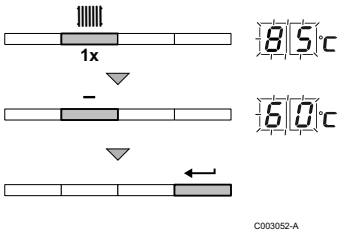

If using an outside temperature sensor, the heating flow temperature is adjusted automatically.

In summer, it is possible to reduce the heating flow temperature whilst maintaining comfort. To do this, proceed as follows:

1. Press the ||||| key 1 time.
2. The symbol ||||| and the current temperature are displayed (the temperature flashes, e.g. 80°C).
3. Change the value by pressing the **[-]** or **[+]** key. In this example using key **[-]** to 60°C.
4. To confirm, press the ↵ key.

It also possible to modify this setting using the parameter P1.

5.3.5. Modifying the domestic hot water temperature setting

It may be that a lower domestic hot water temperature will be sufficient for your needs. Reduce this temperature and save energy. To do this, proceed as follows:

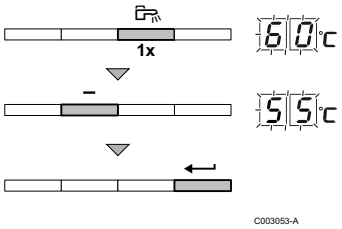

1. Press the key 1 time.
2. The symbol and the current temperature are displayed (the temperature flashes, e.g. 60°C).
3. Change the value by pressing the **[-]** or **[+]** key. In this example using key **[-]** to 55°C.
4. To confirm, press the key.

5.4 Installation shutdown

CAUTION

Do not switch off the boiler. If the central heating system is not used for a long period, we recommend activating the **HOLIDAYS** mode.

5.5 Frost protection

When the heating water temperature in the boiler falls by too much, the integrated protection system in the boiler starts up. This protection functions as follows:

- If the water temperature is lower than 7°C, the heating pump starts up.
- If the water temperature is lower than 4°C, the boiler starts up.
- If the water temperature is higher than 10°C, the boiler shuts down and the heating pump continues to run for a short time.

CAUTION

- The anitfreeze protection does not function if the boiler is switched off.
- The integrated protection system only protects the boiler, not the installation. To protect the installation, set the appliance to **HOLIDAYS** mode.

With the IniControl control panel, the **HOLIDAYS** mode is only available if a room sensor is connected to the boiler.

The **HOLIDAYS** mode protects:

- The installation if the outside temperature is lower than 3°C (factory setting).
- The room temperature if a remote control is connected and the room temperature is lower than 6 °C (factory setting).
- The domestic hot water tank if the tank temperature is lower than 4 °C (the water is reheated to 10 °C).

To configure the holidays mode: See chapter: "Selecting the operating mode", page 20.

6 Checking and maintenance

6.1 General instructions

The boiler does not require a lot of maintenance. Nevertheless, we recommend having the boiler inspected and serviced at regular intervals.

- Maintenance and cleaning of the boiler must be carried out at least once a year by a qualified technician.
- Have the flues swept **at least once a year** or more, depending on the regulations in force in your country.

CAUTION

- Maintenance operations must be done by a qualified engineer.
- We recommend taking out a maintenance contract.
- Only original spare parts must be used.

6.1.1. Control panel DIEMATIC iSystem

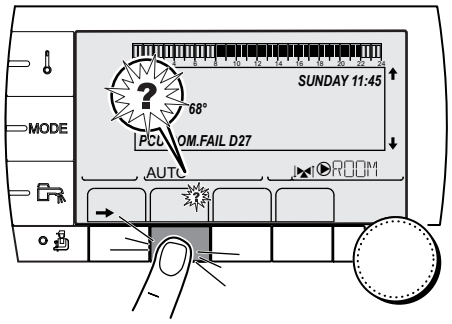

C002302-D-04

The boiler displays a message whenever maintenance is necessary.

1. When the message, **REVISION**, is displayed, press **?** to display the installer's telephone number.
2. Contact the fitter.
3. Have the required checks and services done.

6.2 Periodic checks

- Check the water pressure in the installation several times a year.

If the water pressure is lower than 0,8 bar, more water should be added. If necessary, top up the water level in the heating system (recommended hydraulic pressure between 1,5 and 2,0 bar).

See chapter: "Filling the system", page 35.



T001507-B

- Carry out a visual check for the presence of any water leaks.

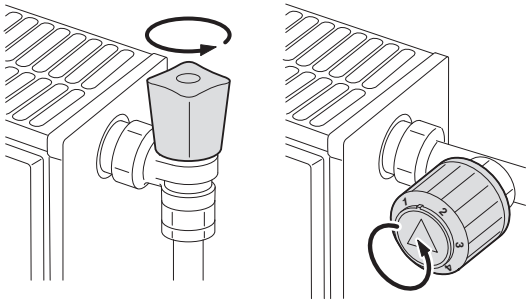

T000181-B

- Open and close the radiator valves several times a year (this prevents the valves from seizing up).
- Clean the outside of the boiler using a damp cloth and a light detergent.

CAUTION

Only a qualified professional is authorised to clean the inside of the boiler.

6.3 Filling the system

1. Check the water pressure in the installation shown on the control panel display.

If the water pressure is lower than 0,8 bar, more water should be added. If necessary, top up the water level in the heating system (recommended hydraulic pressure between 1,5 and 2,0 bar).

2. Open the valves on all radiators connected to the heating system.

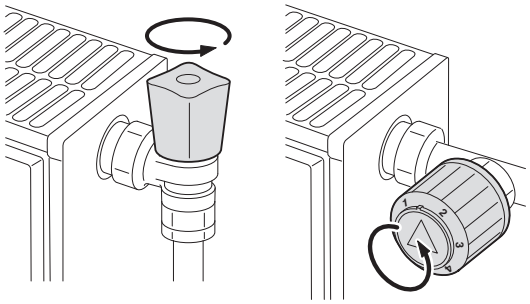

T000181-B

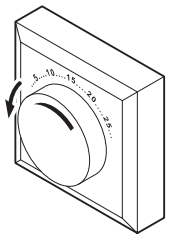

T000182-A

3. Set the room thermostat to as low a temperature as possible.

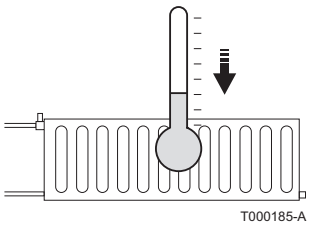

T000185-A

4. Wait until the temperature drops below 40°C and the radiators seem cold before filling the central heating system.

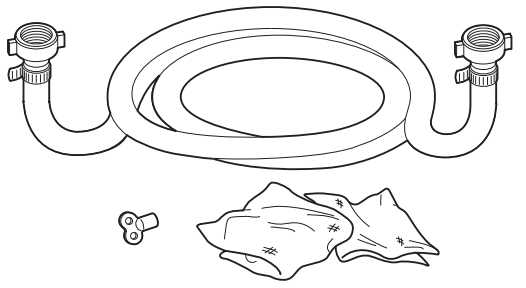

T000845-A

5. To fill with water, use a filling tube with two tap connections, a rag and a bleed key.

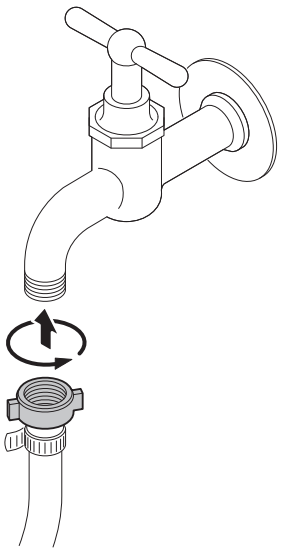

T000846-A

6. Connect the filling tube to a (cold) water tap.

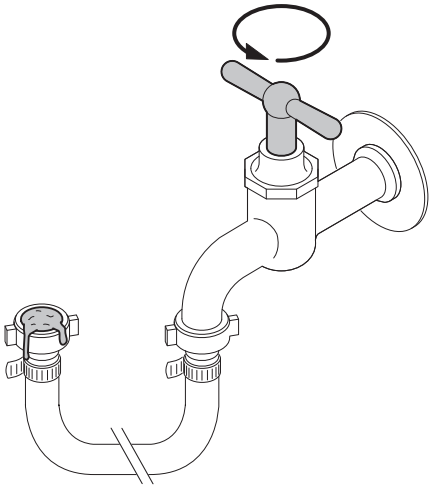

T000847-A

7. Eliminate the air from the filling tube. Slowly fill the tube with water. Hold the end of the tube up, above a bucket. Turn off the tap as soon as water runs out of the pipe.

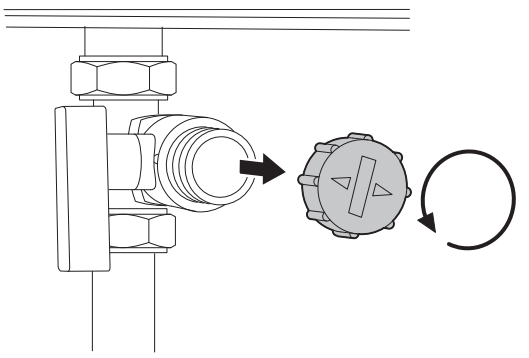

T000848-A

8. Unscrew the plug from the filling/draw-off valve.

The filling/draw-off valve is not necessarily located next to the boiler.

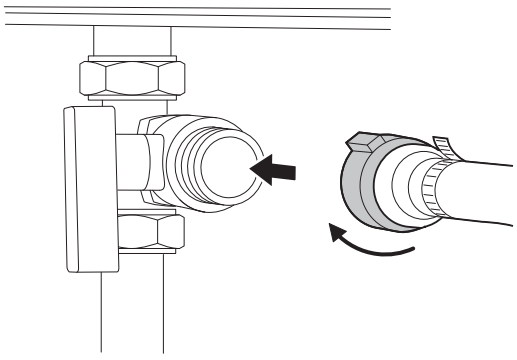

T000849-A

9. Attach the tube to the filling/draw-off valve. Firmly tighten the nut on the filling tube.

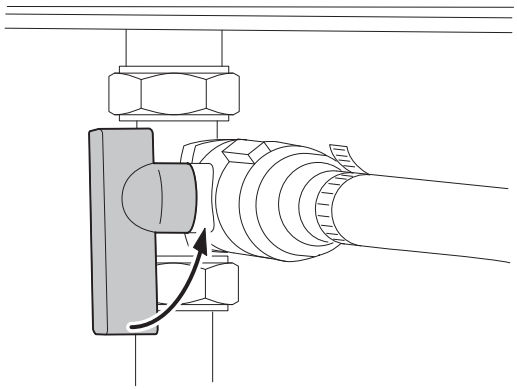

T000850-A

10. Open the filling/draw-off valve on the heating system.
11. Open the running water tap.
12. Check the water pressure in the installation shown on the control panel display.
13. Close the water tap when the water pressure reaches 2 bar.

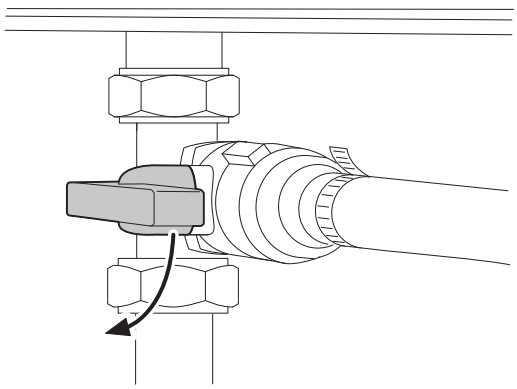

T000853-A

14. Close the filling/draw-off valve on the heating system.Leave the tube on the filling/draw-off valve until the air is purged from the installation.

When water is added, air gets into the heating system. Degas the installation. After the air has been vented, the water pressure can drop below the required level. Check the water pressure in the installation shown on the control panel display. If the water pressure is lower than 0,8 bar, more water should be added.

15. After filling the installation, switch the boiler on.

Filling and bleeding the installation 2 times a year should be sufficient to obtain an adequate hydraulic pressure. If it is often necessary to top up the installation with water, contact your fitter.

6.4 Bleeding the heating system

It is essential that you bleed any air in the calorifier, the conduits or the taps to prevent the annoying noises likely to be produced during heating or when tapping water. To do this, proceed as follows:

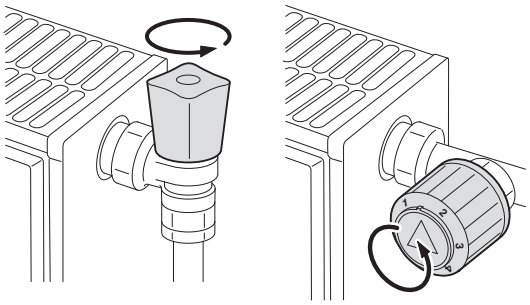
T000181-B

1. Open the valves on all radiators connected to the heating system.

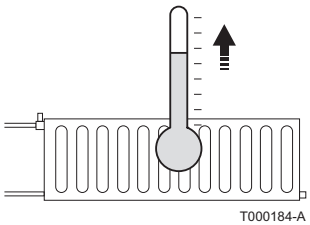
T000184-A

2. Set the heating set point to as high a temperature as possible.
3. Wait until the radiators are hot.

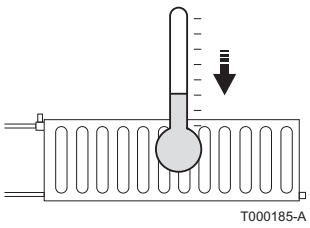
T000185-A

4. Switch the boiler off.
5. Wait around 10 minutes until the radiators are cold.

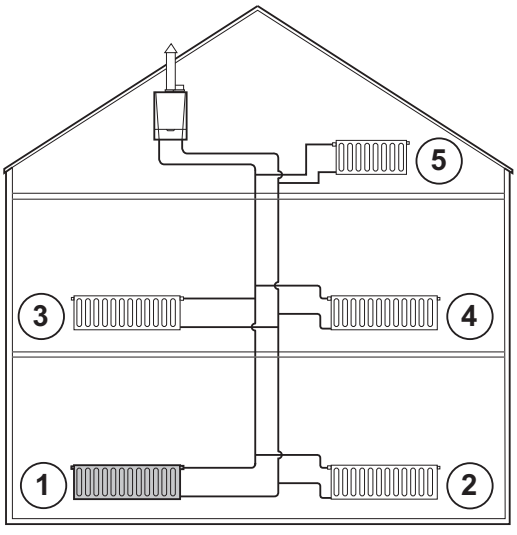

T000854-A

6. Bleed the radiators. Start with the lower floors.

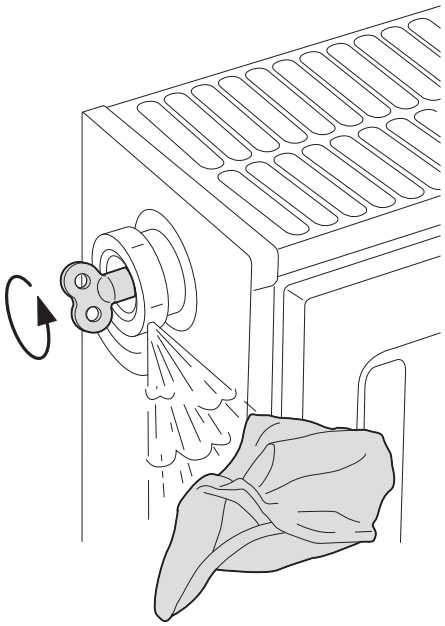

T000217-A

7. Open the bleed connection using the bleed key provided whilst keeping a rag pressed against the connection.

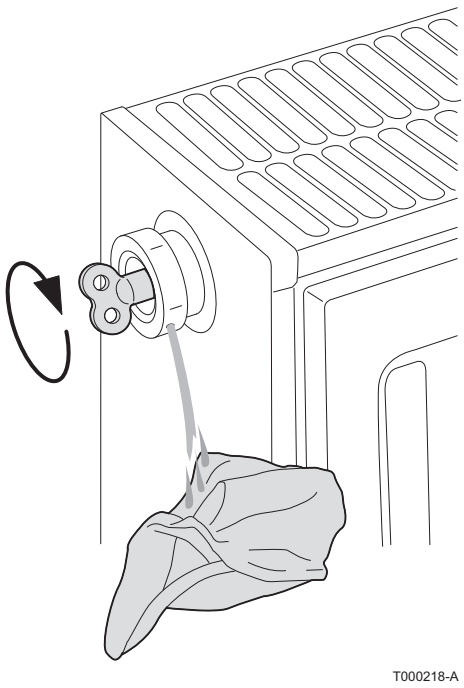

T000218-A

8. Wait until water comes out of the bleed valve and then close the bleed connection.

CAUTION

The water may still be hot.

9. Switch on the boiler. A vent cycle of a duration of around 3 minutes is carried out automatically.
10. After venting, check whether the pressure in the installation is still sufficient.

If the water pressure is lower than 0,8 bar, more water should be added. If necessary, top up the water level in the heating system (recommended hydraulic pressure between 1,5 and 2,0 bar).

See chapter: "Filling the system", page 35

11. Set the heating set point.

6.5 Draining the installation

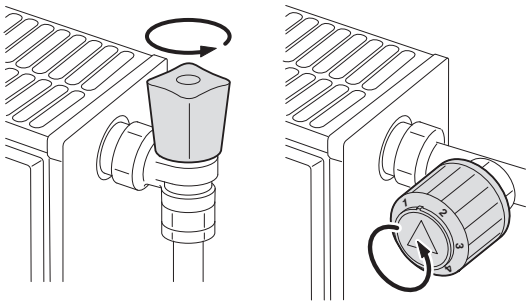
T000181-B

It may become necessary to empty the water from the heating system when the radiators have to be replaced, should there be a major water leak or a risk of frost. To do this, proceed as follows:

1. Open the valves on all radiators connected to the heating system.

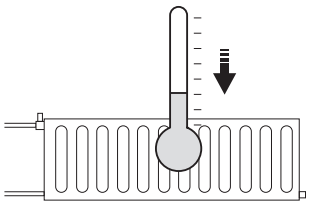
T000185-A

2. Switch off the boiler electrical power supply.
3. Wait around 10 minutes until the radiators are cold.

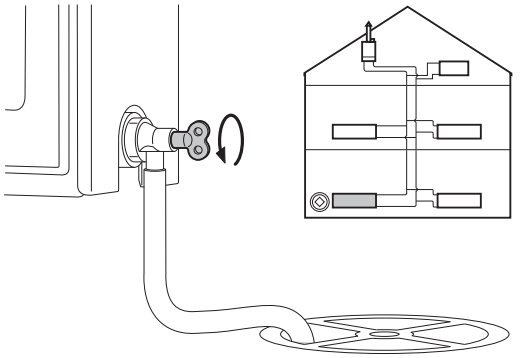
T000858-A

4. Connect an evacuation hose to the plug located at the lowest level. Place the end of the hose in a discharge sump or in a place where the water discharged from the valve can not do any damage.
5. Open the filling/draw-off valve on the heating system. Bleed the heating installation.

WARNING

The water may still be hot.

6. When no more water comes out of the drainage plug, close the drainage valve.

7 Troubleshooting

7.1 Anti-hunting

This display only concerns boilers with the DIEMATIC iSystem control panel.

When the boiler is in "Anti-short-cycle" operating mode, the symbol "**?**" flashes. This is a normal operating mode. When the restart temperature is reached, operation will be guaranteed.

7.2 Messages (Code type Bxx or Mxx)

In the event of failure, the control panel displays a message and a corresponding code.

1. Make a note of the code displayed.
   The code is important for the correct and rapid diagnosis of the type of failure and for any technical assistance that may be needed.
2. Switch the boiler off and switch back on.
   The boiler starts up again automatically when the reason for the blocking has been removed.
3. If the code is displayed again, correct the problem by following the instructions in the table below:

Depending on the control panel, the message display is different:

- Control panel DIEMATIC iSystem: The code and the message are displayed.
- Control panel IniControl: Only the code is displayed.

Code	Messages	Description	Checking / solution
B00	**BL.PSU ERROR**	The PSU PCB is incorrectly configured	Parameter error on the PSU PCB ▸ Contact the professional who takes care of maintenance of the appliance
B01	**BL.MAX BOILER**	Maximum flow temperature exceeded	The water flow in the installation is insufficient ▸ Check the circulation (direction, pump, valves)
B02	**BL.HEATING SPEED**	The increase in flow temperature has exceeded its maximum limit	The water flow in the installation is insufficient ▸ Check the circulation (direction, pump, valves) ▸ Check the water pressure
			Sensor error ▸ Contact the professional who takes care of maintenance of the appliance

Code	Messages	Description	Checking / solution
B07	**BL.DT OUTL RET.**	Maximum difference between the flow and return temperature exceeded	The water flow in the installation is insufficient ▸ Check the circulation (direction, pump, valves) ▸ Check the water pressure
			Sensor error ▸ Contact the professional who takes care of maintenance of the appliance
B08	**BL.RL OPEN**	The **RL** inlet on the PCU PCB terminal block is open	Parameter error ▸ Contact the professional who takes care of maintenance of the appliance
			Bad connection ▸ Contact the professional who takes care of maintenance of the appliance
B09	**BL.INV. L/N**	▸ Contact the professional who takes care of maintenance of the appliance	
B10 **B11**	**BL.BL INPUT OPEN**	The **BL** inlet on the PCU PCB terminal block is open	The contact connected to the **BL** inlet is open ▸ Contact the professional who takes care of maintenance of the appliance
			Parameter error ▸ Contact the professional who takes care of maintenance of the appliance
			Bad connection ▸ Contact the professional who takes care of maintenance of the appliance
B13	**BL. PCU COM**	Communication error with the SCU PCB	Bad connection ▸ Contact the professional who takes care of maintenance of the appliance
			SCU PCB not installed in the boiler ▸ Contact the professional who takes care of maintenance of the appliance
B14	**BL.WATER MIS.**	The water pressure is lower than 0,8 bar	Not enough water in the circuit ▸ Top up the installation with water
B15	**BL.GAS PRESS**	Gas pressure too low	Incorrect setting of the gas pressure switch on the SCU PCB ▸ Check that the gas valve is fully opened ▸ Contact the professional who takes care of maintenance of the appliance
B16	**BL.BAD SU**	The SU PCB is not recognised	Wrong SU PCB for this boiler ▸ Contact the professional who takes care of maintenance of the appliance
B17	**BL.PCU ERROR**	The parameters saved on the PCU PCB are impaired	Parameter error on the PCU PCB ▸ Contact the professional who takes care of maintenance of the appliance
B18	**BL.BAD PSU**	The PSU PCB is not recognised	Wrong PSU PCB for this boiler ▸ Contact the professional who takes care of maintenance of the appliance
B19	**BL.NO CONFIG**	The boiler has not been configured	The PSU PCB has been changed ▸ Contact the professional who takes care of maintenance of the appliance
B21	**BL. COM SU**	Communication error between the PCU and SU PCBs	Bad connection ▸ Contact the professional who takes care of maintenance of the appliance

Code	Messages	Description	Checking / solution
B22	**BL.FLAME LOS**	No flame during operation	No ionization current ▸ Check that the gas valve is fully opened ▸ Contact the professional who takes care of maintenance of the appliance
B25	**BL.SU ERROR**	Internal error on the SU PCB	▸ Contact the professional who takes care of maintenance of the appliance
M04	**REVISION**	A service is required	The date programmed for the service has been reached ▸ If the symbol **?** flashes, press key **?**. The installer's contact details are displayed. ▸ Contact the professional who takes care of maintenance of the appliance
M05	**REVISION A**	An A, B or C service is required	The date programmed for the service has been reached ▸ If the symbol **?** flashes, press key **?**. The installer's contact details are displayed. ▸ Contact the professional who takes care of maintenance of the appliance
M06	**REVISION B**		
M07	**REVISION C**		
M20	**DISGAS**	A boiler vent cycle is underway	Switching the boiler on ▸ Wait 3 minutes
	FL.DRY.B XX DAYS	Floor drying is active **XX** DAYS = Number of days' floor drying remaining.	Floor drying is underway. Heating on the circuits not concerned is shut down. ▸ Contact the professional who takes care of maintenance of the appliance
	FL.DRY.C XX DAYS		
	FL.DRY.B+C XX DAYS		
M23	**CHANGE OUTS SENSOR**	The outside temperature sensor battery is weak	Change the outside radio temperature sensor
	STOP N XX	The shutdown is active **XX** = Number of the active shutdown	A shutdown is underway. The circuits selected for this stop are in Antifreeze mode during the period chosen.

7.3 Faults (Code type Lxx or Dxx)

In the event of operational failure, the control panel flashes and displays an error message and a corresponding code.

Depending on the control panel, the message display is different:

- Control panel DIEMATIC iSystem: The code and the message are displayed.
- Control panel IniControl: Only the code is displayed.

7.3.1. Control panel DIEMATIC iSystem

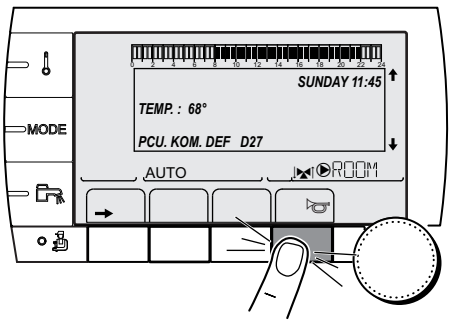

C002604-A-04

1. Make a note of the code displayed.
   The code is important for the correct and rapid diagnosis of the type of failure and for any technical assistance that may be needed.
2. Press the key. If the code is displayed again, switch off the boiler and then switch it back on.

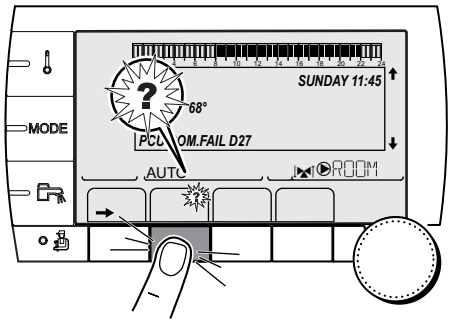

C002302-D-04

3. Press the **?** key. Follow the instructions displayed to solve the problem.
4. Consult the meaning of the codes in the table below:

7.3.2. Control panel IniControl

1. Make a note of the code displayed.
   The code is important for the correct and rapid diagnosis of the type of failure and for any technical assistance that may be needed.
2. Press the key. If the code is displayed again, switch off the boiler and then switch it back on.

7.3.3. List of errors

Code	Faults	Cause of the error	Description	Checking / solution
L00	**PSU FAIL**	PCU	PSU PCB not connected	Bad connection PSU PCB faulty ▸ Contact the professional who takes care of maintenance of the appliance
L01	**PSU PARAM FAIL**	PCU	The safety parameters are incorrect	Bad connection PSU PCB faulty ▸ Contact the professional who takes care of maintenance of the appliance
L02	**DEF.OUTLET S.**	PCU	The boiler flow sensor has short-circuited	Bad connection Sensor fault ▸ Contact the professional who takes care of maintenance of the appliance

Code	Faults	Cause of the error	Description	Checking / solution
L03	**DEF.OUTLET S.**	PCU	The boiler flow sensor is on an open circuit	Bad connection Sensor fault ▸ Contact the professional who takes care of maintenance of the appliance
L04	**DEF.OUTLET S.**	PCU	Boiler temp too low	Bad connection Sensor fault ▸ Contact the professional who takes care of maintenance of the appliance
				No water circulation ▸ Vent the air in the heating system ▸ Check the circulation (direction, pump, valves) ▸ Check the water pressure
L05	**STB OUTLET**	PCU	Boiler temperature too high	Bad connection Sensor fault ▸ Contact the professional who takes care of maintenance of the appliance
				No water circulation ▸ Vent the air in the heating system ▸ Check the circulation (direction, pump, valves) ▸ Check the water pressure
L06	**BACK S.FAILURE**	PCU	The return temperature sensor has short-circuited	Bad connection Sensor fault ▸ Contact the professional who takes care of maintenance of the appliance
L07	**BACK S.FAILURE**	PCU	The return temperature sensor is on an open circuit	Bad connection Sensor fault ▸ Contact the professional who takes care of maintenance of the appliance
L08	**BACK S.FAILURE**	PCU	Return temperature too low	Bad connection Sensor fault ▸ Contact the professional who takes care of maintenance of the appliance
				No water circulation ▸ Vent the air in the heating system ▸ Check the circulation (direction, pump, valves) ▸ Check the water pressure
L09	**STB BACK**	PCU	Return temperature too high	Bad connection Sensor fault ▸ Contact the professional who takes care of maintenance of the appliance
				No water circulation ▸ Vent the air in the heating system ▸ Check the circulation (direction, pump, valves) ▸ Check the water pressure

Code	Faults	Cause of the error	Description	Checking / solution
L10	**DEP-RET<MIN**	PCU	Difference between the flow and return temperatures insufficient	Bad connection Sensor fault ▸ Contact the professional who takes care of maintenance of the appliance
				No water circulation ▸ Vent the air in the heating system ▸ Check the circulation (direction, pump, valves) ▸ Check the water pressure
L11	**DEP-RET>MAX**	PCU	Difference between the flow and return temperatures too great	Bad connection Sensor fault ▸ Contact the professional who takes care of maintenance of the appliance
				No water circulation ▸ Vent the air in the heating system ▸ Check the circulation (direction, pump, valves) ▸ Check the water pressure
L12	**STB OPEN**	PCU	Maximum boiler temperature exceeded (STB thermostat maximum)	Bad connection Sensor fault ▸ Contact the professional who takes care of maintenance of the appliance
				No water circulation ▸ Vent the air in the heating system ▸ Check the circulation (direction, pump, valves) ▸ Check the water pressure
L14	**BURNER FAILURE**	PCU	5 burner start-up failures	Absence of ignition arch ▸ Contact the professional who takes care of maintenance of the appliance
				Presence of the ignition arc but no flame formation ▸ Check that the gas valve is fully opened ▸ Contact the professional who takes care of maintenance of the appliance
				Presence of the flame but insufficient ionization (<3 µA) ▸ Check that the gas valve is fully opened ▸ Contact the professional who takes care of maintenance of the appliance
L16	**PARASIT FLAME**	PCU	Detection of a parasite flame	Ionisation current present when there should not be a flame Ignition transformer defective Gas valve defective The burner remains very hot: CO_2 too high ▸ Contact the professional who takes care of maintenance of the appliance
L17	**VALVE FAIL**	PCU	Problem on the gas valve	Bad connection SU PCB faulty ▸ Contact the professional who takes care of maintenance of the appliance

Code	Faults	Cause of the error	Description	Checking / solution
L34	**FAN FAILURE**	PCU	The fan is not running at the right speed	Bad connection Fan defective ▸ Contact the professional who takes care of maintenance of the appliance
L35	**BACK>BOIL FAIL**	PCU	Flow and return reversed	Bad connection Sensor fault ▸ Contact the professional who takes care of maintenance of the appliance
				Water circulation direction reversed ▸ Check the circulation (direction, pump, valves)
L36	**I-CURRENT FAIL**	PCU	The flame went out more than 5 times in 24 hours while the burner was operating	No ionization current ▸ Check that the gas valve is fully opened ▸ Contact the professional who takes care of maintenance of the appliance
L37	**SU COM.FAIL**	PCU	Communication failure with the SU PCB	Bad connection ▸ Contact the professional who takes care of maintenance of the appliance
L38	**PCU COM.FAIL**	PCU	Communication failure between the PCU and SCU PCBs	Bad connection SCU PCB not connected or faulty ▸ Contact the professional who takes care of maintenance of the appliance
L39	**BL OPEN FAIL**	PCU	The **BL** inlet opened for a short time	Bad connection External cause Parameter incorrectly set ▸ Contact the professional who takes care of maintenance of the appliance
L40	**TEST.HRU.FAIL**	PCU	HRU/URC unit test error	Bad connection External cause Parameter incorrectly set ▸ Contact the professional who takes care of maintenance of the appliance
L250	**DEF.WATER MIS.**	PCU	The water pressure is too low	Hydraulic circuit incorrectly vented Water leak Measurement error ▸ Top up with more water if necessary ▸ Reset the boiler
L251	**MANOMETRE FAIL**	PCU	Fault on the water pressure sensor	Wiring problem The manometer is defective Sensor pcb defective ▸ Contact the professional who takes care of maintenance of the appliance
D03 **D04**	**OUTL S.B FAIL.** **OUTL S.C FAIL.**	SCU	Sensor fault flow circuit B Sensor fault flow circuit C Remarks: The circuit pump is running. The 3-way valve motor on the circuit is no longer powered and can be adjusted manually.	Bad connection Sensor fault ▸ Contact the professional who takes care of maintenance of the appliance

Code	Faults	Cause of the error	Description	Checking / solution
D05	**OUTSI.S.FAIL.**	SCU	Fault external sensor Remarks: The boiler operates on **BOILER MAX** temperature. The valve setting is no longer ensured but monitoring the maximum temperature of the circuit after the valve is ensured. Valves may be manually operated. Reheating the domestic hot water remains ensured.	Bad connection Sensor fault ▸ Contact the professional who takes care of maintenance of the appliance
D07	**AUX.SENS.FAIL.**	SCU	Auxiliary sensor failure	Bad connection Sensor fault ▸ Contact the professional who takes care of maintenance of the appliance
D09	**DHW S.FAILURE**	SCU	Domestic hot water sensor failure Remarks: Heating of domestic hot water is no longer ensured. The load pump operates. The load temperature of the dhw tank is the same as the boiler.	Bad connection Sensor fault ▸ Contact the professional who takes care of maintenance of the appliance
D11 **D12** **D13**	**ROOM S.A FAIL.** **ROOM S.B FAIL.** **ROOM S.C FAIL.**	SCU	Fault room temperature sensor A Fault room temperature sensor B Fault room temperature sensor C Note: The circuit concerned operates without any influence from the room sensor.	Bad connection Sensor fault ▸ Contact the professional who takes care of maintenance of the appliance
D14	**MC COM.FAIL**	SCU	Communication failure between the SCU PCB and the boiler radio module	Bad connection ▸ Check the link and the connectors Boiler module failure ▸ Change the boiler module
D15	**ST.TANK S.FAIL**	SCU	Storage tank sensor failure Note: The hot water storage tank reheating operation is no longer assured.	Bad connection Sensor fault ▸ Contact the professional who takes care of maintenance of the appliance
D16 **D16**	**SWIM.P.B. S.FAIL** **SWIM.P.C. S.FAIL**	SCU	Swimming pool sensor failure circuit B Swimming pool sensor failure circuit C Note: Pool reheating is independent of its temperature.	Bad connection Sensor fault ▸ Contact the professional who takes care of maintenance of the appliance
D17	**DHW 2 S.FAIL**	SCU	Sensor failure tank 2	Bad connection Sensor fault ▸ Contact the professional who takes care of maintenance of the appliance
D27	**PCU COM. FAIL**	SCU	Communication failure between the SCU and PCU PCBs ▸ Contact the professional who takes care of maintenance of the appliance	

Code	Faults	Cause of the error	Description	Checking / solution
D29	**IOBL.3WV B DEF**	SCU	Communication failure between the SCU PCB and the V3V module	The V3V module is switched off The V3V module and the SCU PCB are not connected to the same live terminal The V3V module has been removed ▸ Contact the professional who takes care of maintenance of the appliance
D30	**IOBL.3WV C DEF**	SCU	Communication failure between the SCU PCB and the V3V module	The V3V module is switched off The V3V module and the SCU PCB are not connected to the same live terminal The V3V module has been removed ▸ Contact the professional who takes care of maintenance of the appliance
D31	**COM.IOBL FAIL.**	SCU	The IOBL function is no longer active	Problem on the SCU PCB ▸ Contact the professional who takes care of maintenance of the appliance
D32	**5 RESET:ON/OFF**	SCU	5 resets done in less than an hour ▸ Switch the boiler off and switch back on ▸ If the boiler does not start after several resets (5 attempts possible), contact your heating engineer and inform him of the error message displayed	
D37	**TA-S SHORT-CIR**	SCU	The Titan Active System® is short-circuited ▸ Contact the professional who takes care of maintenance of the appliance Remarks: Domestic hot water production has stopped but can nonetheless be restarted using key . The tank is no longer protected. If: A tank without Titan Active System® is connected to the boiler: Check that the Titan Active System® simulation connector (delivered with package AD212) is fitted to the sensor card.	
D38	**TA-S DISCONNEC**	SCU	The Titan Active System® is on an open circuit ▸ Contact the professional who takes care of maintenance of the appliance Remarks: Domestic hot water production has stopped but can nonetheless be restarted using key . The tank is no longer protected. If: A tank without Titan Active System® is connected to the boiler: Check that the Titan Active System® simulation connector (delivered with package AD212) is fitted to the sensor card.	

8 Technical characteristics

8.1 Technical characteristics

Boiler type			MCA 45	MCA 65	MCA 90	MCA 115
General						
Flow rate setting	Adjustable		Modulating, Start/Stop, 0 - 10 V			
Nominal output (Pn) Heating System (80/60 °C)	minimum-maximum	kW	8,0 - 40,0	12,0 - 61,0	14,1 - 84,2	16,6 - 107,0
	Factory setting	kW	40,0	61,0	84,2	107,0
Nominal output (Pn) Heating System (50/30 °C)	minimum-maximum	kW	8,9 - 43,0	13,3 - 65,0	15,8 - 89,5	18,4 - 114,0
	Factory setting	kW	43,0	65,0	89,5	114,0
Data on the gases and combustion gases						
Gas consumption G20 (Natural gas H)	minimum-maximum	m^3/h	0,9 - 4,4	1,3 - 6,6	1,5 - 9,1	1,8 - 11,7
Gas consumption G31 (Propane)	minimum-maximum	m^3/h	0,3 - 1,7	0,5 - 2,5	0,6 - 3,5	0,6 - 4,7
NOx-Emission per year or (EN 483)		mg/kWh	37	32	45	46
Mass flue gas flow rate	minimum-maximum	Kg/h	14 - 69	21 - 104	28 - 138	36 - 178
Flue gas temperature	minimum-maximum	°C	30 - 67	30 - 68	30 - 68	30 - 72
Maximum counter pressure		Pa	150	100	160	220
Characteristics of the heating circuit						
Water content		l	5,5	6,5	7,5	7,5
Water operating pressure	minimum	kPa (bar)	80 (0,8)	80 (0,8)	80 (0,8)	80 (0,8)
Water operating pressure (PMS)	maximum	kPa (bar)	400 (4,0)	400 (4,0)	400 (4,0)	400 (4,0)
Water temperature	maximum	°C	110	110	110	110
Operating temperature	maximum	°C	90	90	90	90
Electrical characteristics						
Power supply voltage		V/Hz	230/50	230/50	230/50	230/50
Power consumption - Full load	maximum	W	68	88	125	199
Power consumption - Part load	maximum	W	18	23	20	45
Power consumption - Standby	maximum	W	5	6	4	7
Electrical protection index		IP	X4D	X4D	X4D	X4D
Other characteristics						
Weight (empty)	Total	kg	53	60	67	68
Acoustic level at 1 meter		dBA	45	45	52	51

9 Energy savings

9.1 Energy-saving advice

- Keep the room in which the boiler is installed well ventilated.
- Do not block ventilation outlets.
- Do not cover the radiators. Do not hang curtains in front of the radiators.
- Install reflective panels behind the radiators to prevent heat losses.
- Insulate the pipes in rooms that are not heated (cellars and lofts).
- Close the radiators in rooms not in use.
- Do not run hot (or cold) water pointlessly.
- Fit a water-saving shower head to save up to 40 % energy.
- Take showers rather than baths. A bath consumes twice as much water and energy.

9.2 Recommendations

The remote control is available in the following versions:

- Wire
- Radio

The setting of the control panel and/or of the remote control has a considerable influence on energy consumption.

A few tips:

- In the room in which the room thermostat is installed, it's advised not to use thermostatic valve radiators. If a thermostatic valve is used the valve must be fully opened.
- Completely closing and opening thermostatic valve radiators causes undesirable temperature fluctuations. Open and close thermostatic valves in small steps.
- Lower the temperature to around 20°C. This reduces heating costs and energy consumption.
- Lower the temperature when you air the rooms.
- When setting a time schedule , bear days when you are absent and holidays in mind.

10 Warranty

10.1 General

You have just purchased one of our appliances and we thank you for the trust you have placed in our products.

Please note that your appliance will provide good service for a longer period of time if it is regularly checked and maintained.

Your fitter and our customer support network are at your disposal at all times.

10.2 Warranty terms

The following provisions are not exclusive of the buyer being able benefit from the legal provisions applicable regarding hidden defects in the buyer's country.

Starting from the purchase date shown on the original fitter's invoice, your appliance has a contractual guarantee against any manufacturing defect.

The length of the guarantee is mentioned in the price catalogue.

The manufacturer is not liable for any improper use of the appliance or failure to maintain or install the unit correctly (the user shall take care to ensure that the system is installed by a qualified fitter).

In particular, the manufacturer shall not be held responsible for any damage, loss or injury caused by installations which do not comply with the following:

- applicable local laws and regulations,
- specific requirements relating to the installation, such as national and/or local regulations,
- the manufacturer's instructions, in particular those relating to the regular maintenance of the unit,
- the rules of the profession.

The warranty is limited to the exchange or repair of such parts as have been recognised to be faulty by our technical department and does not cover labour, travel and carriage costs.

The warranty shall not apply to the replacement or repair of parts damaged by normal wear and tear, negligence, repairs by unqualified parties, faulty or insufficient monitoring and maintenance, faulty power supply or the use of unsuitable fuel.

Sub-assemblies such as motors, pumps, electric valves etc. are guaranteed only if they have never been dismantled.

The legislation laid down by european directive 99/44/EEC, transposed by legislative decree No. 24 of 2 February 2002 published in O.J. No. 57 of 8 March 2002, continues to apply.

DE DIETRICH THERMIQUE S.A.S.

www.dedietrich-thermique.fr



Direction des Ventes France
57, rue de la Gare
F- 67580 MERTZWILLER
+33 (0)3 88 80 27 00
+33 (0)3 88 80 27 99

De Dietrich info service
N° Indigo 0 825 120 520
0,15 € TTC/MN

DE DIETRICH REMEHA GmbH

www.dedietrich-remeha.de



Rheiner Strasse 151
D- 48282 EMSDETTEN
+49 (0)25 72 / 23-5
+49 (0)25 72 / 23-102
info@dedietrich.de

NEUBERG S.A.

www.dedietrich-heating.com



39 rue Jacques Stas
L- 2010 LUXEMBOURG
+352 (0)2 401 401

VAN MARCKE

www.vanmarcke.be



Weggevoerdenlaan 5
B- 8500 KORTRIJK
+32 (0)56/23 75 11

DE DIETRICH

www.dedietrich-otoplenie.ru



129090 г. Москва
ул. Гиляровского, д. 8
офис 52
+7 495 988-43-04
+7 495 988-43-04
dedietrich@nnt.ru

DE DIETRICH

www.dedietrich-heating.com



Room 512, Tower A, Kelun Building
12A Guanghua Rd, Chaoyang District
C-100020 BEIJING
+86 (0)106.581.4017
+86 (0)106.581.4018
+86 (0)106.581.7056
+86 (0)106.581.4019
contactBJ@dedietrich.com.cn

ÖAG AG

www.oeag.at



Schemmerlstrasse 66-70
A-1110 WIEN
+43 (0)50406 - 61624
+43 (0)50406 - 61569
dedietrich@oeag.at

WALTER MEIER (Klima Schweiz) AG

www.waltermeier.com



Bahnstrasse 24
CH-8603 SCHWERZENBACH
+41 (0) 44 806 44 24
Serviceline +41 (0)8 00 846 846
+41 (0) 44 806 44 25
ch.klima@waltermeier.com

WALTER MEIER (Climat Suisse) SA

www.waltermeier.com

Z.I. de la Veyre B, St-Légier
CH-1800 VEVEY 1
+41 (0) 21 943 02 22
Serviceline +41 (0)8 00 846 846
+41 (0) 21 943 02 33
ch.climat@waltermeier.com

ISO 9001

T000249-B

CE 0063

AD001NU-AC

© Copyright
All technical and technological information contained in these technical instructions, as well as any drawings and technical descriptions supplied, remain our property and shall not be multiplied without our prior consent in writing.

06/09/2010

300024828- 001- A

De Dietrich
DE DIETRICH THERMIQUE
57, rue de la Gare F- 67580 MERTZWILLER - BP 30